CITY OF COPPELL

DALLAS / DENTON COUNTY, TEXAS

STANDARD CONSTRUCTION DETAILS

REVISED JULY 01, 2014

CITY OF COPPELL ORDINANCE # 2006-1129

GENERAL NOTES

1. THESE STANDARD CONSTRUCTION DETAIL DRAWINGS ARE BASED ON THE STANDARD DRAWINGS PUBLISHED BY THE NORTH CENTRAL TEXAS COUNCIL OF GOVERNMENTS (NCTCOG) IN 1996. IN ADDITION TO NUMEROUS LOCAL EXCEPTIONS, MANY DETAILS IN THIS SET ARE UNIQUE TO THE CITY OF COPPELL. THESE STANDARD CONSTRUCTION DETAIL DRAWINGS SUPERSEDE ALL OTHER VERSIONS OF NCTCOG AND CITY OF COPPELL STANDARD CONSTRUCTION DETAILS. THE CITY OF COPPELL RESERVES THE RIGHT TO UPDATE, MODIFY OR SUPERSEDE THESE STANDARD CONSTRUCTION DETAIL DRAWINGS WITHOUT NOTICE. THE CITY OF COPPELL RESERVES THE RIGHT TO REQUIRE METHODS AND MATERIALS CONTRADICTORY TO THOSE SHOWN IN THESE DETAILS ON A CASE BY CASE BASIS.

2. THE CITY OF COPPELL HAS ADOPTED THE "Standard Specifications for Public Works Construction", 4TH EDITION, AS ITS BASIC CONSTRUCTION SPECIFICATIONS. THIS DOCUMENT IS AVAILABLE FOR PURCHASE FROM THE NORTH CENTRAL TEXAS COUNCIL OF GOVERNMENTS (NCTCOG), 616 SIX FLAGS DR., SUITE 200, P.O. BOX 5888, ARLINGTON TEXAS 76005–5888, PH. 817/640–3300, nctcog.org. THE CITY OF COPPELL RESERVES THE RIGHT TO MAKE LOCAL EXCEPTIONS TO ANY STANDARD SPECIFICATION.

3. WHERE THE STANDARD CONSTRUCTION DETAILS AND SPECIFICATIONS DO NOT ADDRESS A SPECIFIC ITEM ADEQUATELY, REFER TO THE APPROPRIATE STANDARDS PUBLISHED BY THE TEXAS DEPARTMENT OF TRANSPORTATION (TxDOT), THE TEXAS MANUAL ON UNIFORM TRAFFIC CONTROL DEVICES (T.M.U.T.C.D.), TEXAS COMMISSION ON ENVIRONMENTAL QUALITY (T.C.E.Q.), TEXAS POLLUTANT DISCHARGE ELIMINATION SYSTEM (T.P.D.E.S.) GENERAL PERMIT, AMERICAN ASSOCIATION OF STATE HIGHWAY AND TRANSPORTATION OFFICIALS (A.A.S.H.T.O.), ASTM International AND THE ENVIRONMENTAL PROTECTION AGENCY (E.P.A).

4. LOCAL, STATE AND FEDERAL ORDINANCES WHICH REGULATE DEVELOPMENT IN THE CITY OF COPPELL ARE:
   a. CITY OF COPPELL SUBDIVISION ORDINANCE.
   b. CITY OF COPPELL FLOODPLAIN ORDINANCE.
   c. CITY OF COPPELL IMPACT FEE ORDINANCE.
   d. CITY OF COPPELL EROSION CONTROL ORDINANCE.
   e. CITY OF COPPELL ZONING ORDINANCE.
   f. CITY OF COPPELL RIGHT–OF–WAY MANAGEMENT ORDINANCE.
   g. CITY OF COPPELL TREE ORDINANCE
   h. CITY OF COPPELL NOISE ORDINANCE
   i. CITY OF COPPELL CITY–WIDE STORM WATER MANAGEMENT STUDY
   j. TEXAS ACCESSIBILITY STANDARDS (T.A.S.)
   k. AMERICANS WITH DISABILITIES ACT (A.D.A.)

THE · CITY · OF
COPPELL
TEXAS · 1890

TABLE OF CONTENTS

Division 1000 EROSION & SEDIMENT CONTROL

1010 STRAW BALE DIKE
1020 SILT FENCE
1030 INTERCEPTOR SWALE
1040 DIVERSION DIKE
1050 TRIANGULAR SEDIMENT FILTER DIKE
1060 ROCK BERM
1070 STABILIZED CONSTRUCTION ENTRANCE
1080 SANDBAG BERM
1090 STONE OUTLET SEDIMENT TRAP
1100 SEDIMENT BASIN
1110 PIPE SLOPE DRAIN
1120 INLET PROTECTION
Grate Inlet Filter Barrier
1130 INLET PROTECTION
Block and Gravel
1135 INLET PROTECTION
Wattle Filter
1140 INLET PROTECTION
Wire Mesh and Gravel
1150 INLET PROTECTION
Excavated Impoundment
1160 EROSION CONTROL MATTING

Division 2000 PAVEMENT SYSTEMS

2010 REINFORCED CONCRETE PAVEMENT
Six–Lane Divided Thoroughfare
2020 REINFORCED CONCRETE PAVEMENT
Four–Lane Divided Thoroughfare
2025 REINFORCED CONCRETE PAVEMENT
Dedicated Left Turn Lane
2030 REINFORCED CONCRETE PAVEMENT
2– & 4–Lane Undivided Thoroughfare
2035 REINFORCED CONCRETE PAVEMENT
28' B–B Residential Street
2040 REINFORCED CONCRETE PAVEMENT
Alleys
2050 REINFORCED CONCRETE PAVEMENT
Pavement Joints
2060 REINFORCED CONCRETE PAVEMENT
Transverse Joint Spacing
2070 REINFORCED CONCRETE PAVEMENT
Street Headers
2080 NOT USED

Division 2000 PAVEMENT SYSTEMS Continued...

2090 NOT USED
2100 NOT USED
2110 HOT MIX ASPHALTIC CONCRETE PAVEMENT
Two–Lane Undivided Thoroughfare
2120 CONCRETE CURB AND GUTTER
Integral and Separate
2130 MEDIAN ISLAND PAVEMENT
Left Turn Lane with Sloped Nose
2140 MEDIAN ISLAND PAVEMENT
Median Island with Sloped Nose
2150–1 DRIVEWAY APPROACH
Type "A"
2150–2 DRIVEWAY APPROACH
Type "A"
2155–1 DRIVEWAY APPROACH
Type "B"
2155–2 DRIVEWAY APPROACH
Type "B"
2160–1 ALLEY APPROACH
Radius Return Type
2160–2 ALLEY APPROACH
Radius Return Type
2165–1 ALLEY APPROACH REPLACEMENT
Flared Type
2165–2 ALLEY APPROACH REPLACEMENT
Flared Type
2170 REINFORCED CONCRETE SIDEWALK
Joints and Spacing
2180 REINFORCED CONCRETE RETAINING WALL
Integral with Sidewalk
2185–1 ACCESSIBLE ROUTES, RAMPS AND CROSSWALKS
Collector Streets and Thoroughfares
2185–2 ACCESSIBLE ROUTES, RAMPS AND CROSSWALKS
Collector Streets and Thoroughfares
2185–3 ACCESSIBLE ROUTES, RAMPS AND CROSSWALKS
Residential Streets W/O R.O.W. Corner Clip
2185–4 ACCESSIBLE ROUTES, RAMPS AND CROSSWALKS
Residential Streets W/O R.O.W. Corner Clip
2185–5 ACCESSIBLE ROUTES, RAMPS AND CROSSWALKS
Residential Streets W/ R.O.W. Corner Clip
2185–6 ACCESSIBLE ROUTES, RAMPS AND CROSSWALKS
Residential Streets W/ R.O.W. Corner Clip
2190 COMMERCIAL DRIVEWAY DECORATIVE PAVING
Stamped Concrete / Concrete Paver Installation
2195 PAVEMENT SYSTEMS GENERAL NOTES
2200 SUBDRAINS
Pavement Subgrade
2210 ALLEY GEOMETRICS
Type "A" and Type "B"
2220 ALLEY GEOMETRICS
Type "C" and Type "D"
2230 ALLEY GEOMETRICS
Type "E" and Type "F"
2240 ALLEY GEOMETRICS
Type "G" and Type "H"
2250 ALLEY GEOMETRICS
Type "J"
2260 ALLEY INTERSECTION
Proposed to Existing
2270 GUARD RAIL AND BARRICADING NOTE
2280 TRAFFIC CONTROL NOTE
2290 FIRE LANE AND PARKING LOT
Reinforced Concrete
2300 FIRE LANE AND PARKING LOT
Hot Mix Asphaltic Concrete
2310 FIRE LANE AND PARKING LOT
Type "A" and Type "B" Turnaround
2320 FIRE LANE AND PARKING LOT
Fire Lane Marking
2330 BOLLARD AND SIGN FOUNDATION
1 2340 TRAFFIC SIGNALS
Collector Streets and Thoroughfares
2350 PAVEMENT SYSTEMS TESTING REQUIREMENTS

1 NEW STANDARD CONSTRUCTION DETAIL. SWL JUL. '14

THE · CITY · OF
COPPELL
TEXAS · 1890

TABLE OF CONTENTS

Division 3000 GENERAL UNDERGROUND CONDUIT

3010 EMBEDMENT
Class "A" and "A–1"
3020 EMBEDMENT
Storm Drain
3030 EMBEDMENT
Water Main
3040 NOT USED
3050 EMBEDMENT
Sanitary Sewer
3060 EMBEDMENT
Class "G" and "G–1"
3070 PAVEMENT CUTS
Removal and Replacement
3080 NOT USED
3090 ENCASEMENT
Roadway Crossing Bore
3095 GENERAL UNDERGROUND CONDUIT
Irrigation Sleeving and Electrical Conduit
3100 GENERAL UNDERGROUND CONDUIT
General Notes and Testing

Division 4000 WATER DISTRIBUTION

4010–1 HORIZONTAL THRUST BLOCK
At Pipe Bend
4010–2 HORIZONTAL THRUST BLOCK
At Pipe Bend
4020 HORIZONTAL THRUST BLOCK
At Tees and Plugs
4030 VERTICAL THRUST BLOCK
At Pipe Bend
4040 THRUST BLOCK
General Notes
4050 GATE VALVE 16" AND SMALLER
Installation
4060–1 NOT USED
4060–2 NOT USED
4070–1 VAULT CONSTRUCTION
Vertical Gate Valve Larger than 16"
4070–2 VAULT CONSTRUCTION
Vertical Gate Valve Larger than 16"
4080 NOT USED

1 NEW STANDARD CONSTRUCTION DETAIL. SWL JUL. '14

Division 4000 WATER DISTRIBUTION Continued...

4090 AIR RELEASE VALVE
Type 1
4100–1 AIR RELEASE VALVE
Type 2
4100–2 AIR RELEASE VALVE
Details
4110 BLOW–OFF VALVE
Type 1
4120 FIRE HYDRANT
Installation
4130 METER SETTING
3/4" Meter – Residential Domestic
4135 METER SETTING
3/4" Meter – Irrigation or Commercial Domestic
4140 METER SETTING
1" Meter – Residential Domestic
4145 METER SETTING
1" Meter – Irrigation or Commercial Domestic
4150 METER SETTING
1–1/2" or 2" Meter – Domestic
4155 METER SETTING
1–1/2" or 2" Meter – Irrigation
4160 DETECTOR CHECK VALVE INSTALLATION
3" to 6" Service
1 4162 DOMESTIC AND IRRIGATION SERVICE INSTALLATION
3" to 6" Service
4165 DETECTOR CHECK VALVE INSTALLATION
8" to 12" Service
4170 FIRE DEPARTMENT CONNECTION (F.D.C.)
Located Outside Paving
4175 FIRE DEPARTMENT CONNECTION (F.D.C.)
Located Inside Paving
4180 BUILDING FIRE SPRINKLER SYSTEM
Connection to Private Water Main
4190 DETECTOR CHECK VAULT
Pre–Cast Construction
4195 DETECTOR CHECK VAULT
Cast–In–Place Construction
4200 WATER MAIN ADJUSTMENT
at Storm Drain Crossing
4210 WATER MAIN ADJUSTMENT
at Sanitary Sewer Crossing
4220 VALVE LOCATION AND IDENTIFICATION
Curb Lettering and Color Coding
1 4225 WATER MAIN ABANDONMENT
Inside and Outside of Pavement
4230 WATER DISTRIBUTION
Testing Requirements

THE CITY OF COPPELL TEXAS 1890

TABLE OF CONTENTS

Division 5000 SANITARY SEWER

5010 SANITARY SEWER
Main Tie–in at Cleanout or Stubout
5020 SANITARY SEWER
Manhole: Pre–Cast
5030 SANITARY SEWER
Manhole: Cast–in–Place
5040 NOT USED
5050 SANITARY SEWER
Manhole: Pressure Type
5060 SANITARY SEWER
Manhole: Vented Type
5070 SANITARY SEWER
Manhole: Outside Drop Connection
5080 SANITARY SEWER
Manhole: Inside Drop Connection
5090 SANITARY SEWER
Manhole: Line Intersection
5100 SANITARY SEWER
Manhole: False Bottom
5105 SANITARY SEWER
Wastewater Access Device (W.A.D.)
5110 SANITARY SEWER
Cleanout
5120 SANITARY SEWER
Standard Service Connection
5130 SANITARY SEWER
Deep Service Connection
5140 SANITARY SEWER
Lateral Replacement Prior to Paving
5150 SANITARY SEWER
Manhole Abandonment In and Out of Paving
5160 SANITARY SEWER
Aerial Crossing
5170 MANHOLE AND CLEANOUT LOCATION AND IDENTIFICATION
Curb Lettering and Color Coding
5180 SANITARY SEWER
General Notes and Testing

Division 6000 STORM DRAIN

6010 STORM DRAIN
Manhole 4', 5', or 6' Square
6020–1 STORM DRAIN
Curb Inlet: 5', 10', 15' or 20' Opening
6020–2 STORM DRAIN
Curb Inlet: 5', 10', 15' or 20' Opening
6020–3 STORM DRAIN
Curb Inlet: Rebar, Manhole Frame and Cover
6020–4 STORM DRAIN
Curb Inlet: Bill of Reinforcing Steel
6020–5 STORM DRAIN
Curb Inlet: Summary of Quantities
6030–1 STORM DRAIN
Recessed Curb Inlet: 5', 10', 15' or 20'
6030–2 STORM DRAIN
Recessed Curb Inlet: 5', 10', 15' or 20'
6030–3 STORM DRAIN
Recessed Curb Inlet: Throat and Manhole Cover
6030–4 STORM DRAIN
Recessed Curb Inlet: General Notes
6040 STORM DRAIN
Drop Inlet
6050 STORM DRAIN
Grate Inlet
6060 STORM DRAIN
Full Channel Lining
6070 STORM DRAIN
Vertical Headwall
6080 STORM DRAIN
Sloping Headwall
1 6085 STORM DRAIN
Pipe Collar and Field Connection
6090 STORM DRAIN
General Notes and Testing

1 NEW STANDARD CONSTRUCTION DETAIL. SWL JUL. '14

THE · CITY · OF
COPPELL
TEXAS · 1890

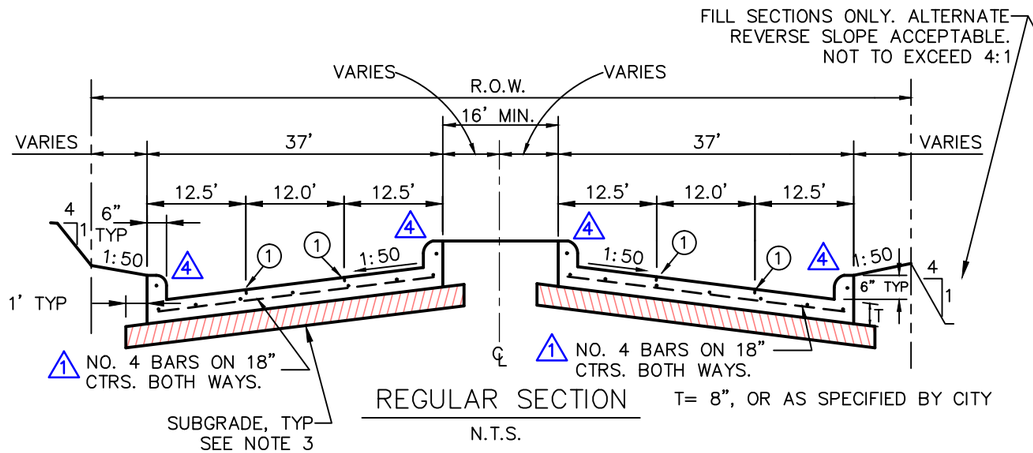

REGULAR SECTION

N.T.S.

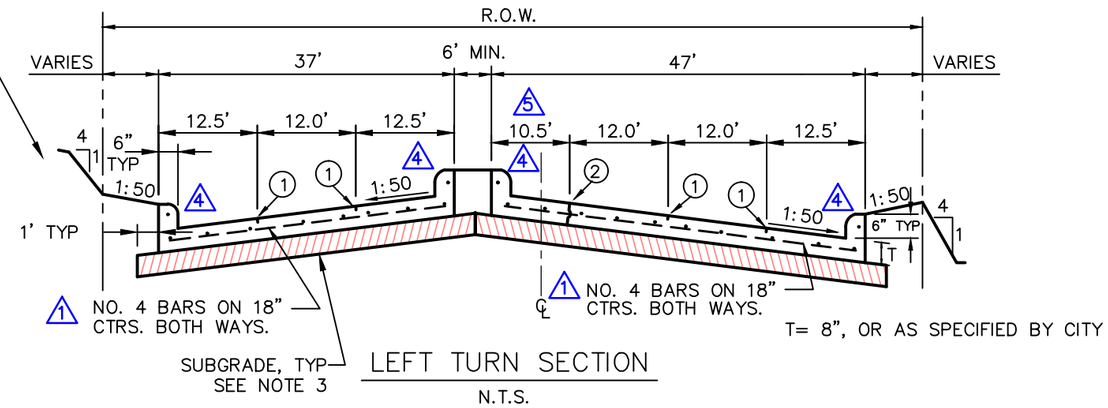

LEFT TURN SECTION

N.T.S.

① SAWED LONGITUDINAL CONTRACTION JOINT. KEY WAY CONSTRUCTION JOINT ONLY WITH CITY APPROVAL. SEE STANDARD CONSTRUCTION DETAIL 2050.

② KEY WAY CONSTRUCTION JOINT. SEE STANDARD CONSTRUCTION DETAIL 2050.

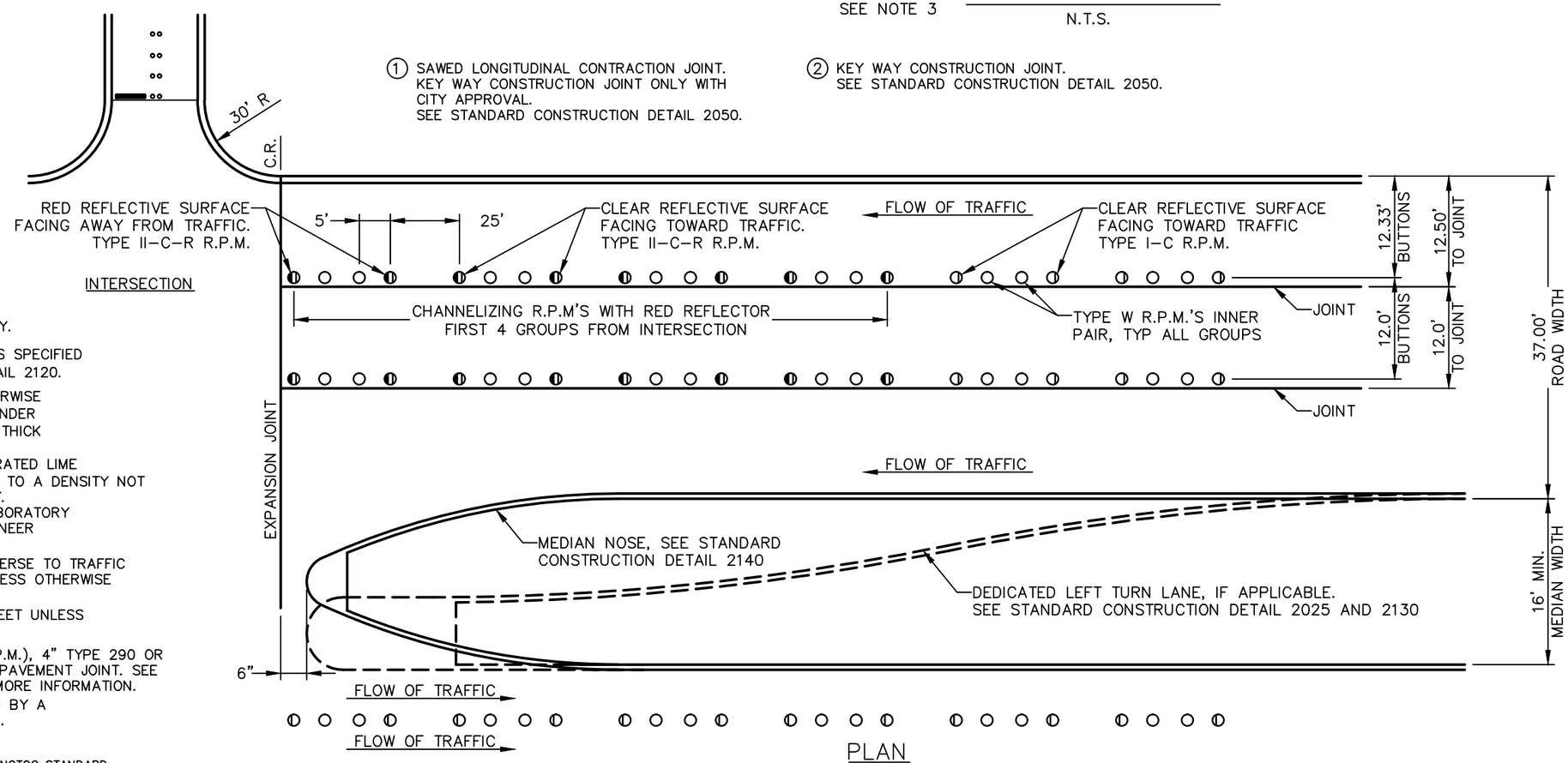

INTERSECTION

PLAN

N.T.S.

NOTES:

1. MIN. PAVEMENT DEPTH AND STRENGTH SHALL BE 8" – CLASS "C", OR AS SPECIFIED BY CITY.
2. CURB HEIGHT AND WIDTH SHALL BE 6", OR AS SPECIFIED BY CITY. SEE STANDARD CONSTRUCTION DETAIL 2120.
3. SUBGRADE (MIN. REQUIREMENTS–UNLESS OTHERWISE APPROVED BY CITY ENGINEER). SUBGRADE UNDER ALL PAVEMENT SHALL BE INITIALLY MIXED 8" THICK AND RE-MIXED 6" THICK AND SHALL BE STABILIZED WITH 6% MIN. BY WEIGHT OF HYDRATED LIME (GENERALLY ±40 LBS./S.Y.) AND COMPACTED TO A DENSITY NOT LESS THAN 95% STANDARD PROCTOR DENSITY. ALTERNATIVE SUBGRADES, SUPPORTED BY LABORATORY TESTS, MAY BE SUBMITTED TO THE CITY ENGINEER FOR APPROVAL.
4. PAVEMENT SURFACE FINISH SHALL BE TRANSVERSE TO TRAFFIC LANES AND SHALL BE STEEL TINE FINISH UNLESS OTHERWISE SPECIFIED BY CITY. (2)
5. ALL DIMENSIONS TO BACK OF CURB AND IN FEET UNLESS OTHERWISE SHOWN.
6. CHANNELIZING RAISED PAVEMENT MARKER (R.P.M.), 4" TYPE 290 OR APPROVED EQUAL, SHALL BE INSTALLED OFF PAVEMENT JOINT. SEE STANDARD CONSTRUCTION DETAIL 2195 FOR MORE INFORMATION. (3)
7. CONCRETE STREET SECTION SHALL BE FORMED BY A SELF-PROPELLED SLIP FORM PAVING MACHINE.

North Central Texas Council of Governments

NOTE: STANDARDS ARE ADOPTED FROM THE NCTOG STANDARD DRAWINGS DATED NOV. '96, WITH LOCAL EXCEPTIONS.

NO.	LOCAL EXCEPTION	BY	DATE
5	INCREASED LEFT TURN LANE WIDTH FROM 10.0' TO 10.5'	SWL	JUL. '14
4	ADDED NO. 4 BAR TO CURB	SWL	JUL. '14
3	EXPANDED NOTE 6 TO ADD RAISED PAVEMENT MARKER INFORMATION, AND ADD NOTE 7.	SWL	JUL. '14
2	CHANGED FROM BAKER BROOM FINISH TO STEEL TINE FINISH	SWL	JUL. '14
1	CHANGED BAR SIZE FROM NO. 3 TO NO. 4	SWL	JUL. '14

THE CITY OF COPPELL TEXAS 1840

STANDARD CONSTRUCTION DETAILS

REINFORCED CONCRETE PAVEMENT
SIX-LANE DIVIDED THOROUGHFARE

CITY OF COPPELL DALLAS COUNTY, TEXAS

STD. SPEC. REFERENCE
301., 303.

STANDARD DETAIL
2010

PATH: S:\Standard_Details\New_Dets_modified\SDCoppell2005.dwg

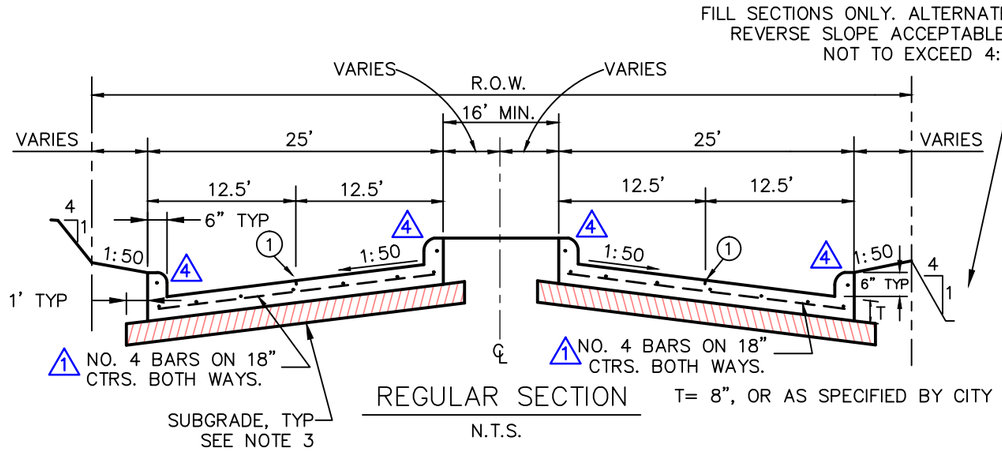

REGULAR SECTION

N.T.S.

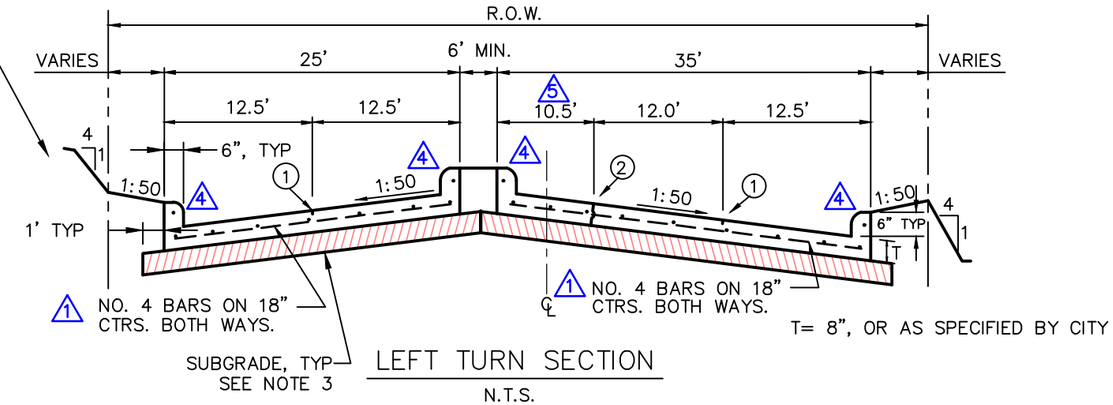

LEFT TURN SECTION

N.T.S.

① SAWED LONGITUDINAL CONTRACTION JOINT. KEY WAY CONSTRUCTION JOINT ONLY WITH CITY APPROVAL. SEE STANDARD CONSTRUCTION DETAIL 2050.

② KEY WAY CONSTRUCTION JOINT. SEE STANDARD CONSTRUCTION DETAIL 2050.

NOTES:

1. MIN. PAVEMENT DEPTH AND STRENGTH SHALL BE 8" – CLASS "C", OR AS SPECIFIED BY CITY.
2. CURB HEIGHT AND WIDTH SHALL BE 6", OR AS SPECIFIED BY CITY. SEE STANDARD CONSTRUCTION DETAIL 2120.
3. SUBGRADE (MIN. REQUIREMENTS–UNLESS OTHERWISE APPROVED BY CITY ENGINEER). SUBGRADE UNDER ALL PAVEMENT SHALL BE INITIALLY MIXED 8" THICK AND RE–MIXED 6" THICK AND SHALL BE STABILIZED WITH 6% MIN. BY WEIGHT OF HYDRATED LIME (GENERALLY ±40 LBS./S.Y.) AND COMPACTED TO A DENSITY NOT LESS THAN 95% STANDARD PROCTOR DENSITY. ALTERNATIVE SUBGRADES, SUPPORTED BY LABORATORY TESTS, MAY BE SUBMITTED TO THE CITY ENGINEER FOR APPROVAL.
4. PAVEMENT SURFACE FINISH SHALL BE TRANSVERSE TO TRAFFIC LANES AND SHALL BE STEEL TINE FINISH UNLESS OTHERWISE SPECIFIED BY CITY. (2)
5. ALL DIMENSIONS TO BACK OF CURB AND IN FEET UNLESS OTHERWISE SHOWN.
6. CHANNELIZING RAISED PAVEMENT MARKER (R.P.M.), 4" TYPE 290 OR APPROVED EQUAL, SHALL BE INSTALLED OFF PAVEMENT JOINT. SEE STANDARD CONSTRUCTION DETAIL 2195 FOR MORE INFORMATION. (3)
7. CONCRETE STREET SECTION SHALL BE FORMED BY A SELF–PROPELLED SLIP FORM PAVING MACHINE.

INTERSECTION

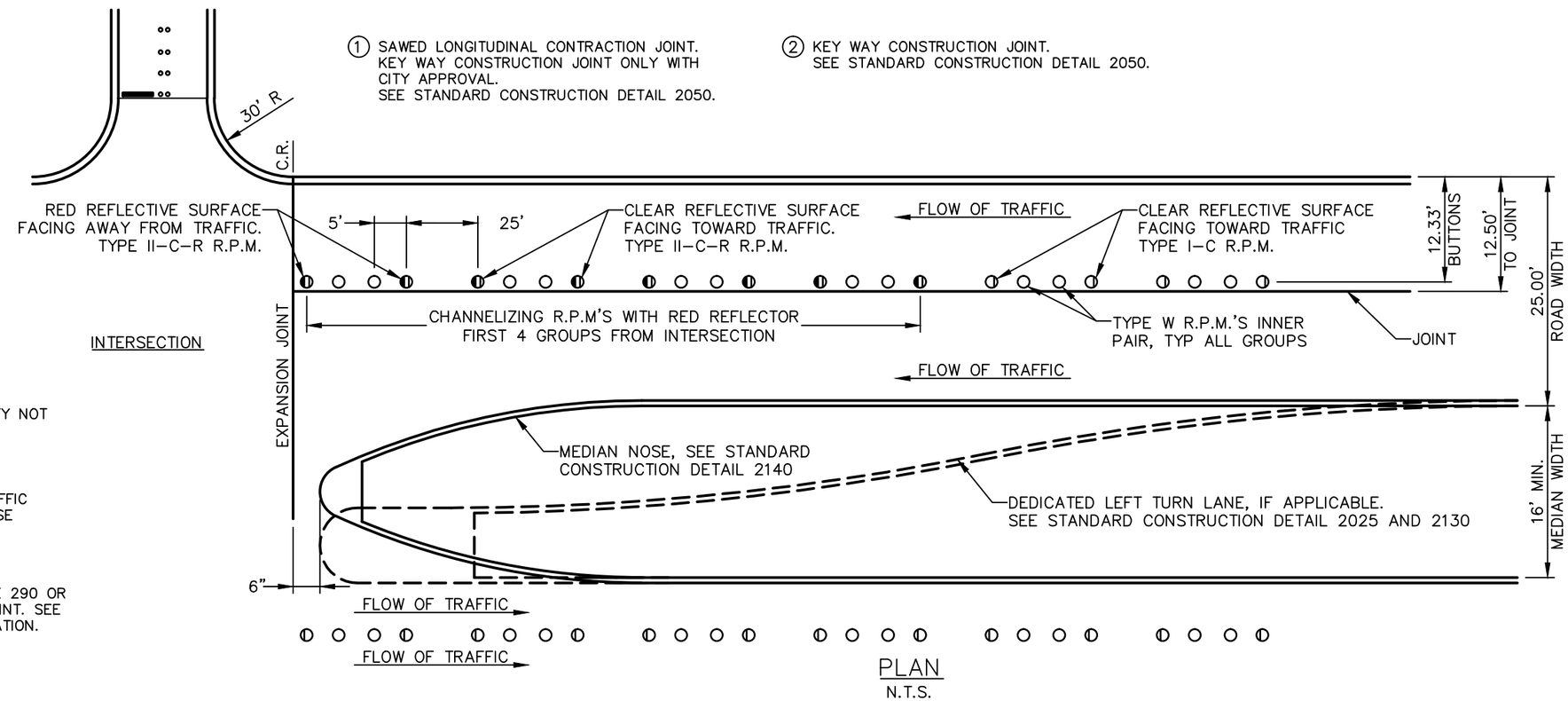

PLAN

N.T.S.

North Central Texas Council of Governments

NOTE: STANDARDS ARE ADOPTED FROM THE NCTOG STANDARD DRAWINGS DATED NOV. '96, WITH LOCAL EXCEPTIONS.

NO.	LOCAL EXCEPTION	BY	DATE
5	INCREASED LEFT TURN LANE WIDTH FROM 10.0' TO 10.5'	SWL	JUL. '14
4	ADDED NO. 4 BAR TO CURB	SWL	JUL. '14
3	EXPANDED NOTE 6 TO ADD RAISED PAVEMENT MARKER INFORMATION, AND ADD NOTE 7.	SWL	JUL. '14
2	CHANGED FROM BAKER BROOM FINISH TO STEEL TINE FINISH	SWL	JUL. '14
1	CHANGED BAR SIZE FROM NO. 3 TO NO. 4	SWL	JUL. '14

THE CITY OF COPPELL TEXAS 1890

STANDARD CONSTRUCTION DETAILS

REINFORCED CONCRETE PAVEMENT FOUR-LANE DIVIDED THOROUGHFARE

CITY OF COPPELL DALLAS COUNTY, TEXAS

STD. SPEC. REFERENCE 301., 303.

STANDARD DETAIL 2020

PATH: S:\Standard_Details\New_Dets_modified\SDCoppell2005.dwg

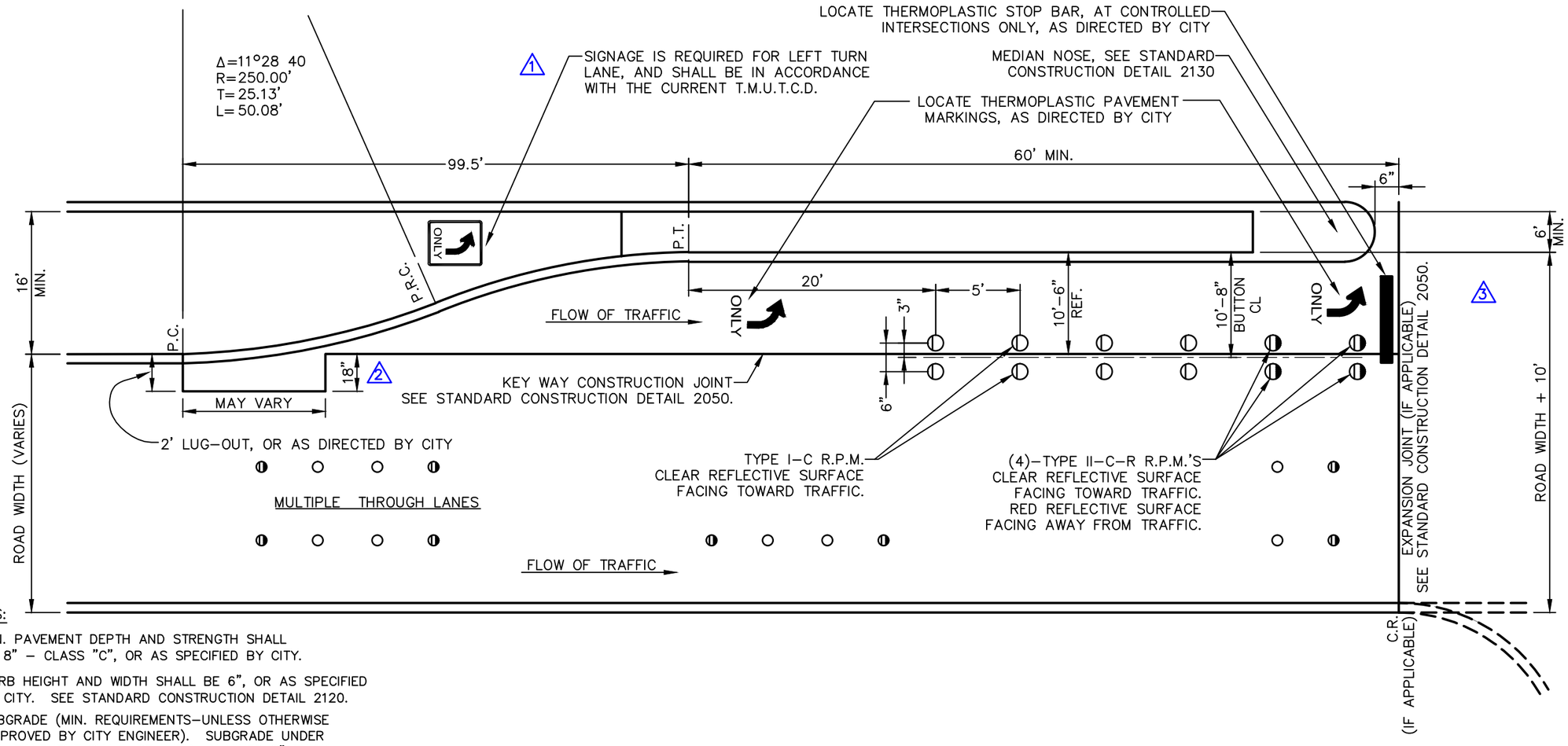

PLAN
N.T.S.

NOTES:

1. MIN. PAVEMENT DEPTH AND STRENGTH SHALL BE 8" – CLASS "C", OR AS SPECIFIED BY CITY.
2. CURB HEIGHT AND WIDTH SHALL BE 6", OR AS SPECIFIED BY CITY. SEE STANDARD CONSTRUCTION DETAIL 2120.
3. SUBGRADE (MIN. REQUIREMENTS–UNLESS OTHERWISE APPROVED BY CITY ENGINEER). SUBGRADE UNDER ALL PAVEMENT SHALL BE INITIALLY MIXED 8" THICK AND RE–MIXED 6" THICK AND SHALL BE STABILIZED WITH 6% MIN. BY WEIGHT OF HYDRATED LIME (GENERALLY ±40 LBS./S.Y.) AND COMPACTED TO A DENSITY NOT LESS THAN 95% STANDARD PROCTOR DENSITY. ALTERNATIVE SUBGRADES, SUPPORTED BY LABORATORY TESTS, MAY BE SUBMITTED TO THE CITY ENGINEER FOR APPROVAL.
4. PAVEMENT SURFACE FINISH SHALL BE TRANSVERSE TO TRAFFIC LANES AND SHALL BE STEEL TINE FINISH UNLESS OTHERWISE SPECIFIED BY CITY.
5. ALL DIMENSIONS TO BACK OF CURB AND IN FEET UNLESS OTHERWISE SHOWN.
6. (4) CHANNELIZING RAISED PAVEMENT MARKER (R.P.M.), 4" TYPE 290 OR APPROVED EQUAL, SHALL BE INSTALLED OFF PAVEMENT JOINT. SEE STANDARD CONSTRUCTION DETAIL 2195 FOR MORE INFORMATION.
7. (5) CONCRETE STREET SECTION SHALL BE FORMED BY A SELF–PROPELLED SLIP FORM PAVING MACHINE.

North Central Texas Council of Governments

NOTE: STANDARDS ARE ADOPTED FROM THE NCTOG STANDARD DRAWINGS DATED NOV. '96, WITH LOCAL EXCEPTIONS.

NO.	LOCAL EXCEPTION	BY	DATE
5	ADD NOTE 7.	SWL	JUL. '14
4	EXPANDED NOTE 6 TO ADD RAISED PAVEMENT MARKER INFORMATION	SWL	JUL. '14
3	ELIMINATED STAMPED CONCRETE CROSSWALK	SWL	JUL. '14
2	CHANGED DIMENSION FROM 24" TO 18"	SWL	JUL. '14
1	UPDATED SIGNAGE NOTE	SWL	JUL. '14

THE CITY OF COPPELL TEXAS 1891

STANDARD CONSTRUCTION DETAILS

REINFORCED CONCRETE PAVEMENT DEDICATED LEFT TURN LANE

CITY OF COPPELL DALLAS COUNTY, TEXAS

STD. SPEC. REFERENCE 301., 303.

STANDARD DETAIL 2025

PATH: S:\Standard_Details\New_Dets_modified\SDCoppell2005.dwg

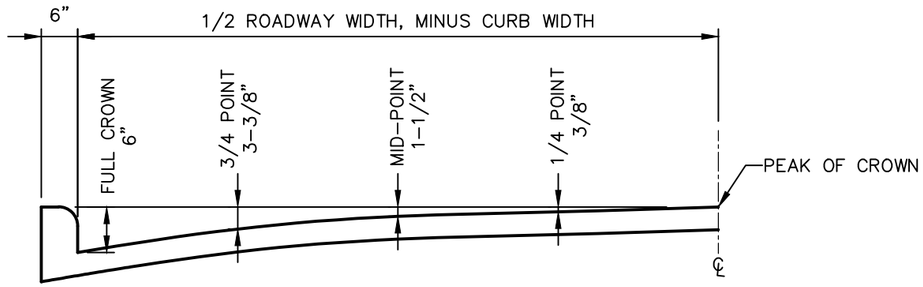

CROWN HEIGHT AND ORDINATES FOR PARABOLIC HALF SECTION

N.T.S.

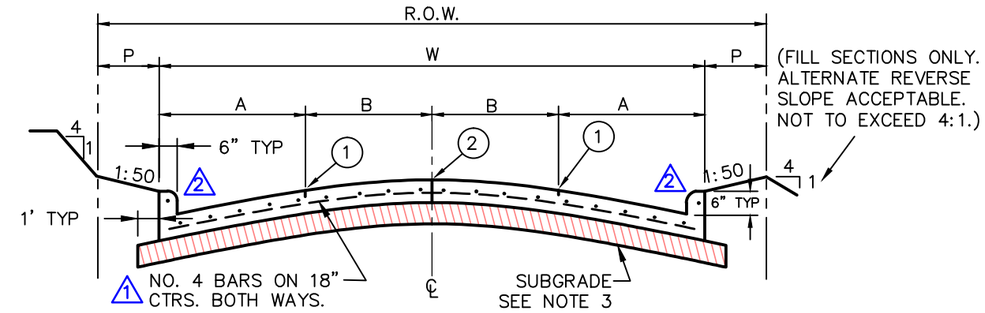

W STREET WIDTH	A	B	R.O.W. WIDTH	P	PARABOLIC CROWN HEIGHT	PAVEMENT THICKNESS
28'	14'	N–A	VARIES	VARIES	6"	8" (2)
37'	8.5'	10'	VARIES	VARIES	6"	8" (2)
41'	10.5'	10'	VARIES	VARIES	6"	8" (2)
45'	11.5'	11'	VARIES	VARIES	6"	8" (2)

FOUR TRAVEL LANES OR
TWO TRAVEL LANES & TWO PARKING LANES

N.T.S.

(1) SAWED LONGITUDINAL CONTRACTION JOINT. KEY WAY CONSTRUCTION JOINT ONLY WITH CITY APPROVAL. SEE STANDARD CONSTRUCTION DETAIL 2050.

(2) KEY WAY CONSTRUCTION JOINT. SEE STANDARD CONSTRUCTION DETAIL 2050.

NOTES:

1. MIN. PAVEMENT DEPTH AND STRENGTH SHALL BE 8" – CLASS "C", OR AS SPECIFIED BY CITY.
2. CURB HEIGHT AND WIDTH SHALL BE 6", OR AS SPECIFIED BY CITY. SEE STANDARD CONSTRUCTION DETAIL 2120.
3. SUBGRADE (MIN. REQUIREMENTS–UNLESS OTHERWISE APPROVED BY CITY ENGINEER). SUBGRADE UNDER ALL PAVEMENT SHALL BE INITIALLY MIXED 8" THICK AND RE–MIXED 6" THICK AND SHALL BE STABILIZED WITH 6% MIN. BY WEIGHT OF HYDRATED LIME (GENERALLY ±40 LBS./S.Y.) AND COMPACTED TO A DENSITY NOT LESS THAN 95% STANDARD PROCTOR DENSITY. ALTERNATIVE SUBGRADES, SUPPORTED BY LABORATORY TESTS, MAY BE SUBMITTED TO THE CITY ENGINEER FOR APPROVAL.
4. PAVEMENT SURFACE FINISH SHALL BE TRANSVERSE TO TRAFFIC LANES AND SHALL BE STEEL TINE FINISH UNLESS OTHERWISE SPECIFIED BY CITY.
5. ALL DIMENSIONS TO BACK OF CURB AND IN FEET UNLESS OTHERWISE SHOWN.
6. (3) CHANNELIZING RAISED PAVEMENT MARKER (R.P.M.), 4" TYPE 290 OR APPROVED EQUAL, SHALL BE INSTALLED OFF PAVEMENT JOINT. SEE STANDARD CONSTRUCTION DETAIL 2195 FOR MORE INFORMATION.
7. (4) CONCRETE STREET SECTION SHALL BE FORMED BY A SELF–PROPELLED SLIP FORM PAVING MACHINE.

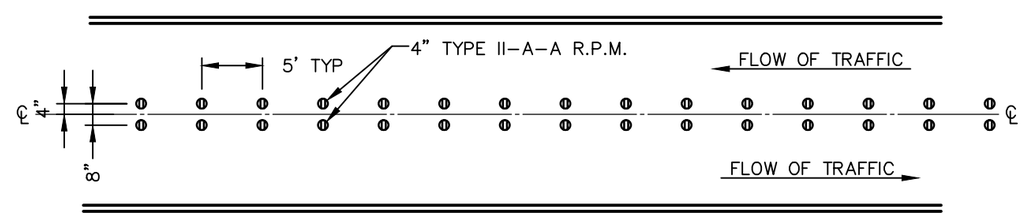

UNDIVIDED MULTI–LANE CHANNELIZING R.P.M. DETAIL

N.T.S.

North Central Texas Council of Governments

NOTE: STANDARDS ARE ADOPTED FROM THE NCTOG STANDARD DRAWINGS DATED NOV. '96, WITH LOCAL EXCEPTIONS.

NO.	LOCAL EXCEPTION	BY	DATE
4	ADD NOTE 7.	SWL	JUL. '14
3	EXPANDED NOTE 6 TO ADD RAISED PAVEMENT MARKER INFORMATION	SWL	JUL. '14
2	ADDED NO. 4 BAR TO CURB	SWL	JUL. '14
1	CHANGED BAR SIZE FROM NO. 3 TO NO. 4	SWL	JUL. '14

THE CITY OF COPPELL TEXAS 1890

STANDARD CONSTRUCTION DETAILS

REINFORCED CONCRETE PAVEMENT
TWO & FOUR-LANE UNDIVIDED THOROUGHFARE

CITY OF COPPELL DALLAS COUNTY, TEXAS

STD. SPEC. REFERENCE 301., 303.

STANDARD DETAIL 2030

PATH: S:\Standard_Details\New_Dets_modified\SDCoppell2005.dwg

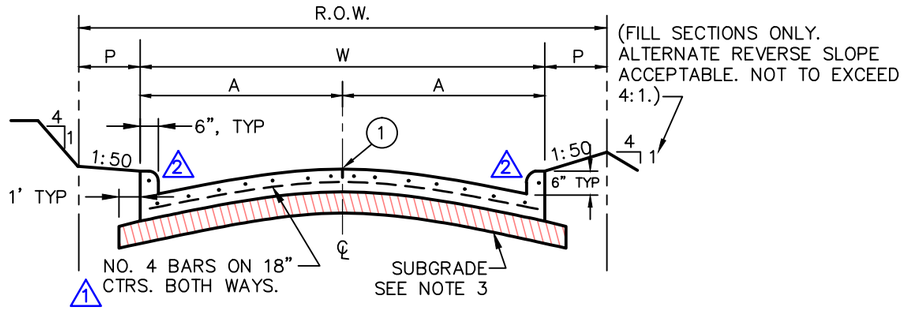

W STREET WIDTH	A	R.O.W. WIDTH	P	PARABOLIC CROWN HEIGHT	PAVEMENT THICKNESS
28'	14'	VARIES	VARIES	6"	6" (2)

RESIDENTIAL STREET
ONE TRAVEL LANE & TWO PARKING LANES
N.T.S.

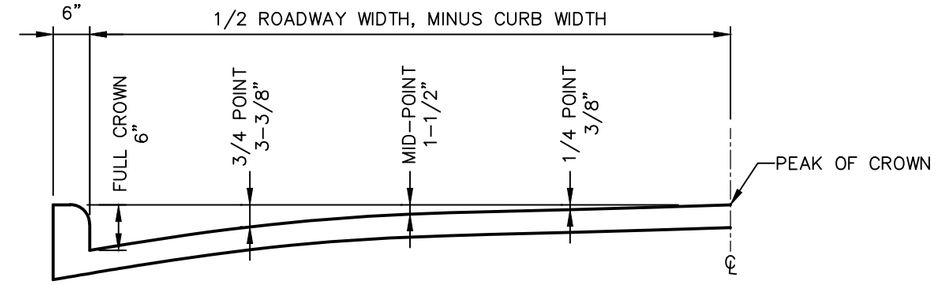

CROWN HEIGHT AND ORDINATES FOR PARABOLIC HALF SECTION
N.T.S.

NOTES:

1. MIN. PAVEMENT STRENGTH SHALL CLASS "C", OR AS SPECIFIED BY CITY.
2. CURB HEIGHT AND WIDTH SHALL BE 6", OR AS SPECIFIED BY CITY. SEE STANDARD CONSTRUCTION DETAIL 2120.
3. SUBGRADE (MIN. REQUIREMENTS–UNLESS OTHERWISE APPROVED BY CITY ENGINEER). SUBGRADE UNDER ALL PAVEMENT SHALL BE INITIALLY MIXED 8" THICK AND RE–MIXED 6" THICK AND SHALL BE STABILIZED WITH 6% MIN. BY WEIGHT OF HYDRATED LIME (GENERALLY ±40 LBS./S.Y.) AND COMPACTED TO A DENSITY NOT LESS THAN 95% STANDARD PROCTOR DENSITY. ALTERNATIVE SUBGRADES, SUPPORTED BY LABORATORY TESTS, MAY BE SUBMITTED TO THE CITY ENGINEER FOR APPROVAL.
4. (3) PAVEMENT SURFACE FINISH SHALL BE PARALLEL TO TRAFFIC LANES AND SHALL BE BAKER BROOM FINISH UNLESS OTHERWISE SPECIFIED BY CITY.
5. ALL DIMENSIONS TO BACK OF CURB AND IN FEET UNLESS OTHERWISE SHOWN.
6. (4) IF SPECIFIED, CHANNELIZING RAISED PAVEMENT MARKER (R.P.M.), 4"TYPE 290 OR APPROVED EQUAL, SHALL BE INSTALLED OFF PAVEMENT JOINT. SEE STANDARD CONSTRUCTION DETAIL 2195 FOR MORE INFORMATION.
7. RESIDENTIAL STREETS GREATER THAN 28' B–B SHALL BE CONSTRUCTED IN ACCORDANCE WITH STANDARD CONSTRUCTION DETAIL 2030.
8. ANY OTHER RESIDENTIAL STREET SECTIONS LESS THAN 28' B–B WILL BE CONSIDERED ON A CASE–BY–CASE BASIS AND WILL REQUIRE CITY ENGINEER AND FIRE MARSHAL APPROVAL.
9. (4) CONCRETE STREET SECTION SHALL BE FORMED BY A SELF–PROPELLED SLIP FORM PAVING MACHINE.

(1) SAWED LONGITUDINAL CONTRACTION JOINT ON PAVEMENT LESS THAN 8" THICK. KEY WAY CONSTRUCTION JOINT ON PAVEMENT WITH THICKNESS OF 8" OR GREATER. SEE STANDARD CONSTRUCTION DETAIL 2050.

(2) OR AS SPECIFIED BY CITY.

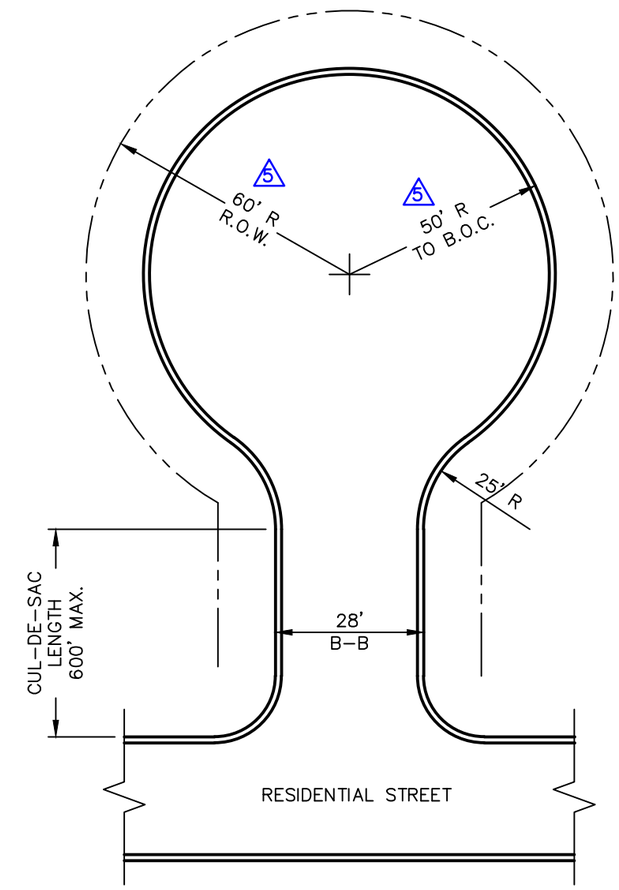

RESIDENTIAL STREET
TYPICAL CUL–DE–SAC
N.T.S.

North Central Texas Council of Governments

NOTE: STANDARDS ARE ADOPTED FROM THE NCTOG STANDARD DRAWINGS DATED NOV. '96, WITH LOCAL EXCEPTIONS.

NO.	LOCAL EXCEPTION	BY	DATE
5	CHANGE R.O.W. TO 60' R, AND B.O.C. TO 50' R	SWL	SEP. '14
4	EXPANDED NOTE 6 TO ADD RAISED PAVEMENT MARKER INFORMATION, AND ADD NOTE 9	SWL	JUL. '14
3	CHANGED SURFACE FINISH DIRECTION FROM TRANSVERSE TO PARALLEL	SWL	JUL. '14
2	ADDED NO. 4 BAR TO CURB	SWL	JUL. '14
1	CHANGED BAR SIZE FROM NO. 3 TO NO. 4	SWL	JUL. '14

THE CITY OF COPPELL TEXAS 1890

STANDARD CONSTRUCTION DETAILS

REINFORCED CONCRETE PAVEMENT
28' B-B RESIDENTIAL STREET

CITY OF COPPELL DALLAS COUNTY, TEXAS

STD. SPEC. REFERENCE
301., 303.

STANDARD DETAIL
2035

PATH: S:\Standard_Details\New_Dets_modified\SDCoppell2005.dwg

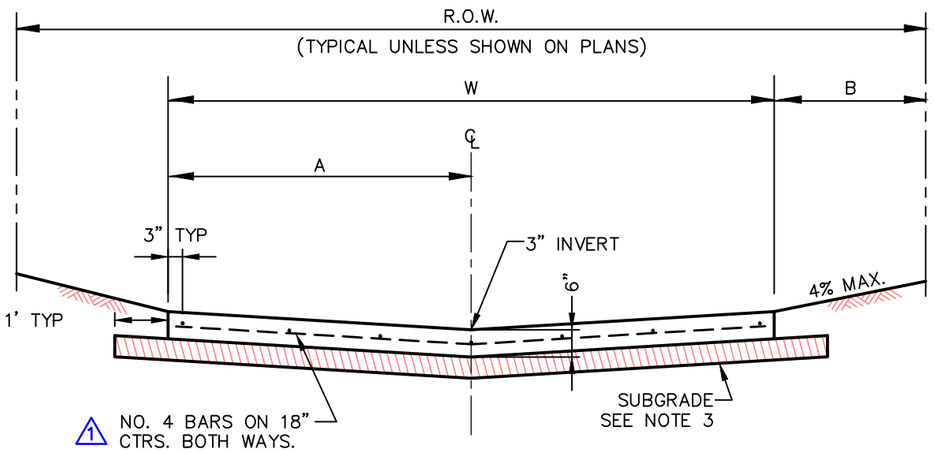

ALLEY SECTION WITHOUT CURB

N.T.S.

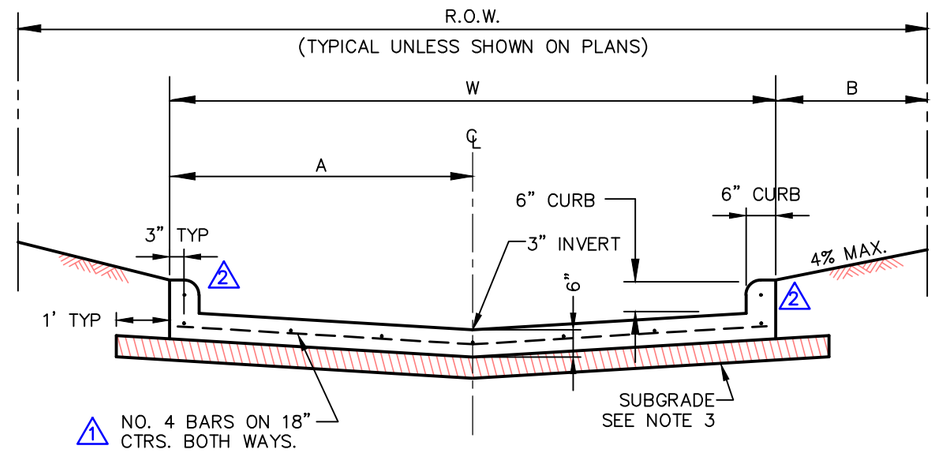

ALLEY SECTION WITH CURB

N.T.S.

NOTES:

1. MIN. PAVEMENT STRENGTH SHALL CLASS "C", OR AS SPECIFIED BY CITY.
2. CURB HEIGHT AND WIDTH SHALL BE 6", OR AS SPECIFIED BY CITY. SEE STANDARD CONSTRUCTION DETAIL 2120.
3. SUBGRADE (MIN. REQUIREMENTS–UNLESS OTHERWISE APPROVED BY CITY ENGINEER). SUBGRADE UNDER ALL PAVEMENT SHALL BE INITIALLY MIXED 8" THICK AND RE–MIXED 6" THICK AND SHALL BE STABILIZED WITH 6% MIN. BY WEIGHT OF HYDRATED LIME (GENERALLY ±40 LBS./S.Y.) AND COMPACTED TO A DENSITY NOT LESS THAN 95% STANDARD PROCTOR DENSITY. ALTERNATIVE SUBGRADES, SUPPORTED BY LABORATORY TESTS, MAY BE SUBMITTED TO THE CITY ENGINEER FOR APPROVAL.
4. (3) PAVEMENT SURFACE FINISH SHALL BE PARALLEL TO TRAFFIC LANES AND SHALL BE BAKER BROOM FINISH UNLESS OTHERWISE SPECIFIED BY CITY.
5. PROVIDE SAWED AND SEALED TRANSVERSE CONTRACTION JOINTS AT NOT MORE THAN 15' C–C.
6. SEALED EXPANSION JOINTS TO BE PLACED AT ALL INTERSECTIONS, NOT TO EXCEED 500' BETWEEN JOINTS.
7. (4) CONCRETE STREET SECTION SHALL BE FORMED BY A SELF–PROPELLED SLIP FORM PAVING MACHINE.

ALLEY WIDTH (W)	A	B	R.O.W. WIDTH
10'	5'	2.5'	15'
12'	6'	2.5'	17'
15'	7.5'	2.5'	20'
16'	8'	2.5'	21'
20'	10'	2.5'	25'

North Central Texas Council of Governments

NOTE: STANDARDS ARE ADOPTED FROM THE NCTOG STANDARD DRAWINGS DATED NOV. '96, WITH LOCAL EXCEPTIONS.

NO.	LOCAL EXCEPTION	BY	DATE
4	ADD NOTE 7	SWL	JUL. '14
3	CHANGED SURFACE FINISH DIRECTION FROM TRANSVERSE TO PARALLEL	SWL	JUL. '14
2	ADDED NO. 4 BAR TO CURB	SWL	JUL. '14
1	CHANGED BAR SIZE FROM NO. 3 TO NO. 4	SWL	JUL. '14

THE CITY OF COPPELL TEXAS 1890

STANDARD CONSTRUCTION DETAILS

REINFORCED CONCRETE PAVEMENT ALLEYS

CITY OF COPPELL DALLAS COUNTY, TEXAS

STD. SPEC. REFERENCE 301., 303.

STANDARD DETAIL 2040

PATH: S:\Standard_Details\New_Dets_modified\SDCoppell2005.dwg

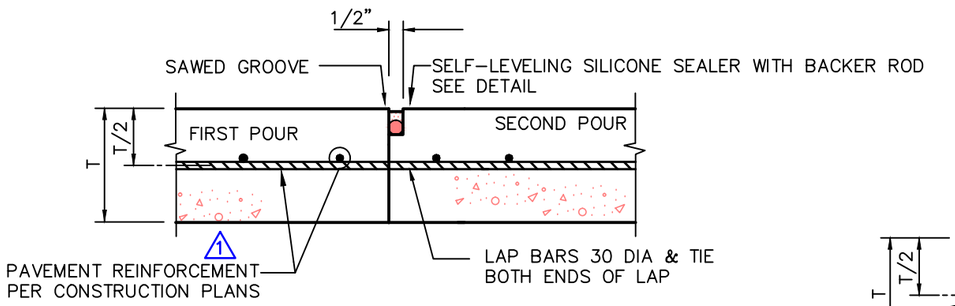

CONSTRUCTION JOINT – NEW CONSTRUCTION

(FOR PAVEMENT THICKNESS 7" OR LESS)

N.T.S.

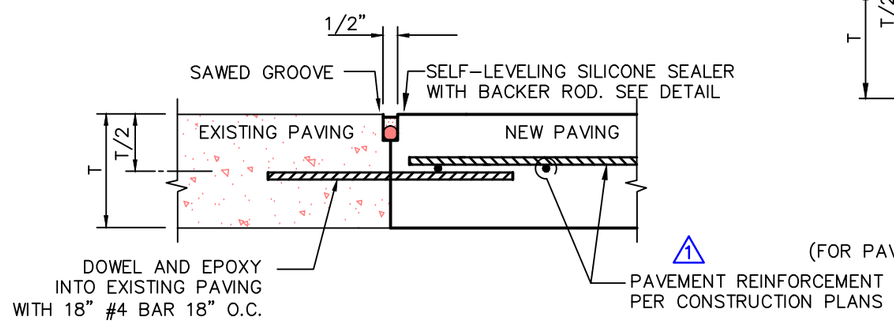

CONSTRUCTION JOINT – PAVING REPAIR

(FOR CONCRETE PAVEMENT REPAIR, ANY THICKNESS)

N.T.S.

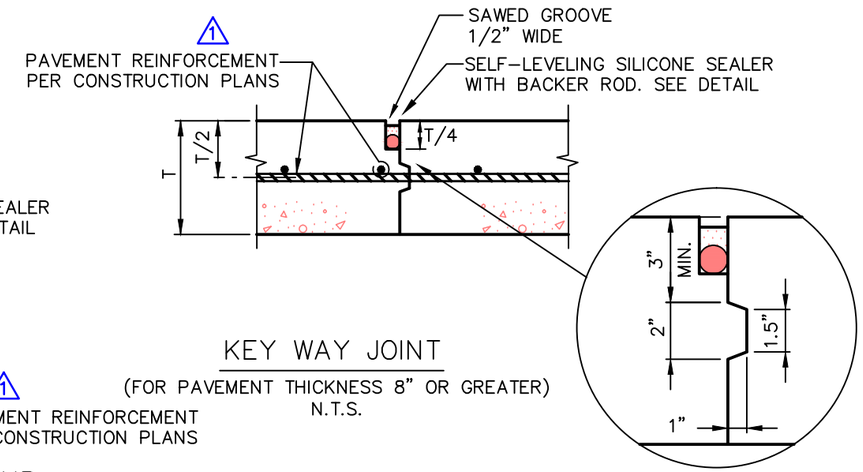

KEY WAY JOINT

(FOR PAVEMENT THICKNESS 8" OR GREATER)

N.T.S.

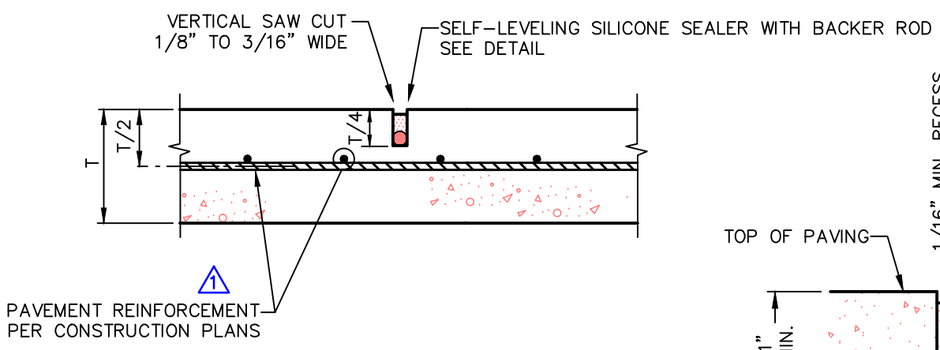

SAWED CONTRACTION JOINT

N.T.S.

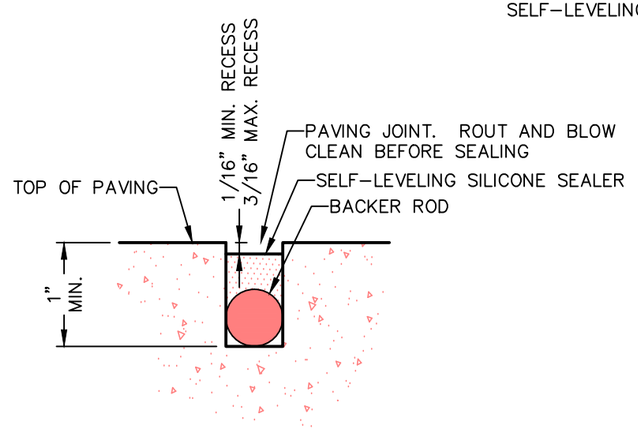

JOINT SEALING DETAIL

N.T.S.

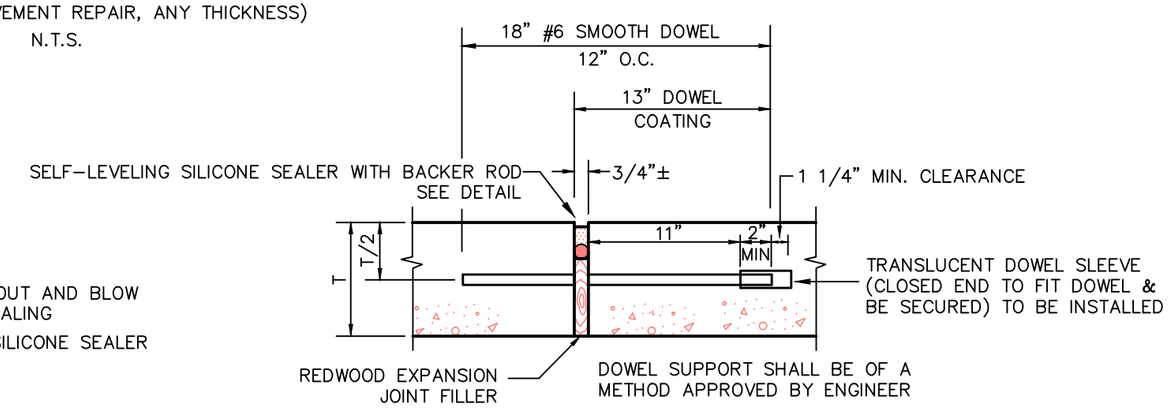

NOTE: THE USE OF WOOD TO SUPPORT AND/OR SECURE REDWOOD EXPANSION JOINT FILLER, STEEL REINFORCEMENT OR FORMS IS PROHIBITED.

EXPANSION JOINT

(SPACED 500 FT. MAXIMUM; LOCATE AT STRUCTURES AND AT INTERSECTION P.C.'S & P.T.'S)

N.T.S.

North Central Texas Council of Governments

NOTE: STANDARDS ARE ADOPTED FROM THE NCTOG STANDARD DRAWINGS DATED NOV. '96, WITH LOCAL EXCEPTIONS.

NO.	LOCAL EXCEPTION	BY	DATE
1	CHANGED PAVEMENT REINFORCEMENT CALLOUT FROM NO. 3 BARS	SWL	JUL. '14

THE CITY OF COPPELL TEXAS 1890

STANDARD CONSTRUCTION DETAILS

REINFORCED CONCRETE PAVEMENT
PAVEMENT JOINTS

CITY OF COPPELL DALLAS COUNTY, TEXAS

STD. SPEC. REFERENCE
303., 401.

STANDARD DETAIL
2050

PATH: S:\Standard_Details\New_Dets_modified\SDCoppell2005.dwg

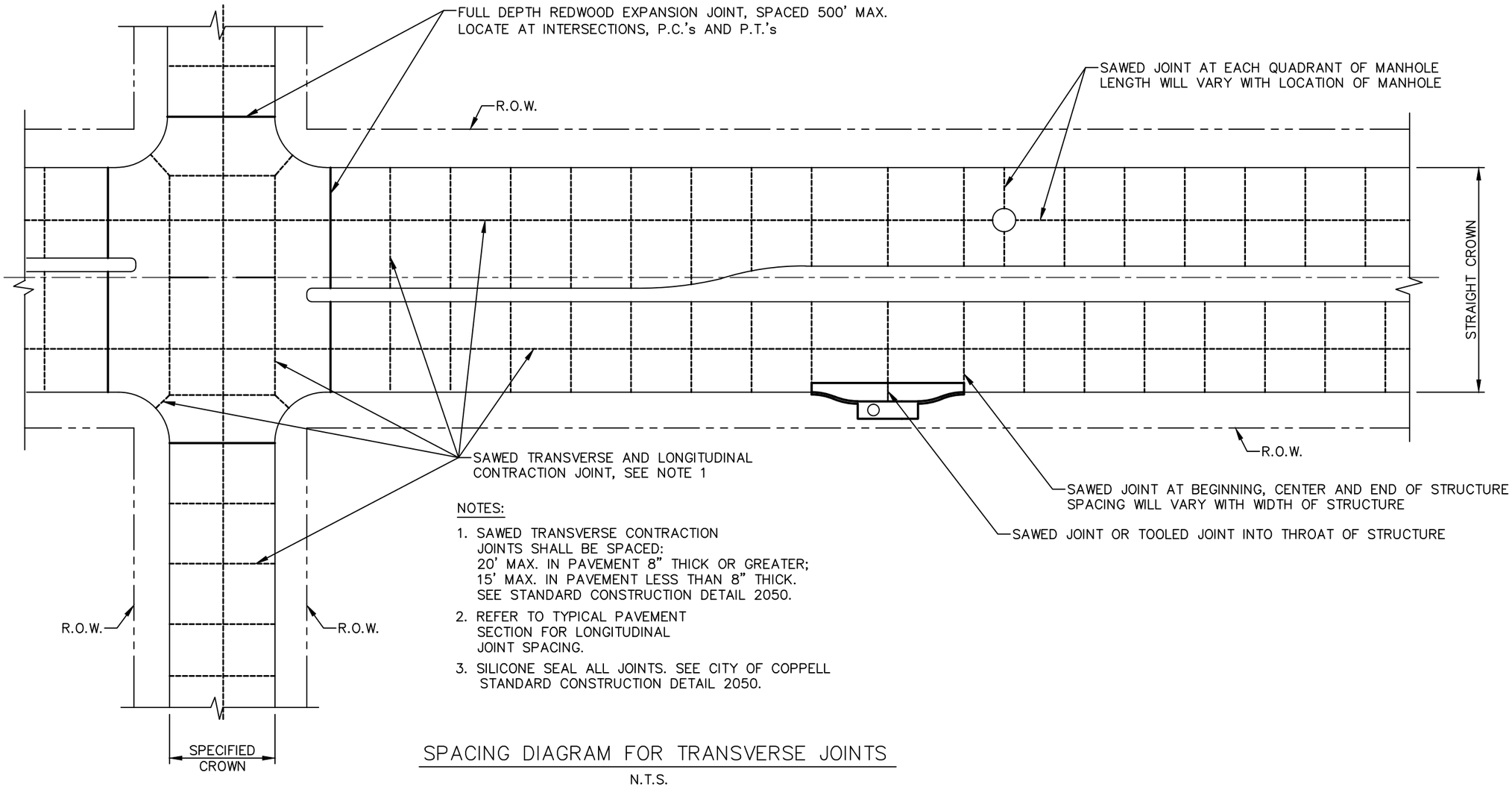

NOTES:

1. SAWED TRANSVERSE CONTRACTION JOINTS SHALL BE SPACED:
   20' MAX. IN PAVEMENT 8" THICK OR GREATER;
   15' MAX. IN PAVEMENT LESS THAN 8" THICK.
   SEE STANDARD CONSTRUCTION DETAIL 2050.
2. REFER TO TYPICAL PAVEMENT SECTION FOR LONGITUDINAL JOINT SPACING.
3. SILICONE SEAL ALL JOINTS. SEE CITY OF COPPELL STANDARD CONSTRUCTION DETAIL 2050.

SPACING DIAGRAM FOR TRANSVERSE JOINTS

N.T.S.

North Central Texas Council of Governments

NOTE: STANDARDS ARE ADOPTED FROM THE NCTOG STANDARD DRAWINGS DATED NOV. '96, WITH LOCAL EXCEPTIONS.

NO.	LOCAL EXCEPTION	BY	DATE

THE CITY OF COPPELL TEXAS 1890

STANDARD CONSTRUCTION DETAILS

REINFORCED CONCRETE PAVEMENT
TRANSVERSE JOINT SPACING

CITY OF COPPELL DALLAS COUNTY, TEXAS

STD. SPEC. REFERENCE
303., 401.

STANDARD DETAIL
2060

PATH: S:\Standard_Details\New_Dets_modified\SDCoppell2005.dwg

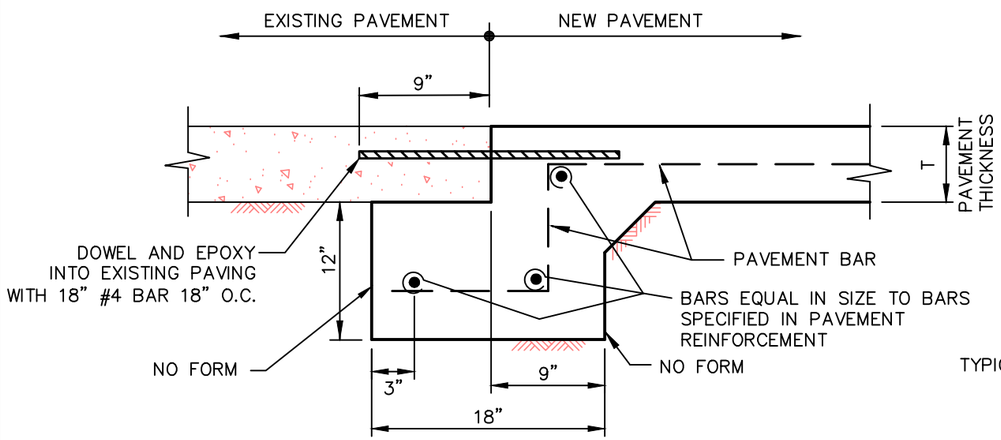

STREET HEADER AT EXISTING PAVEMENT

N.T.S.

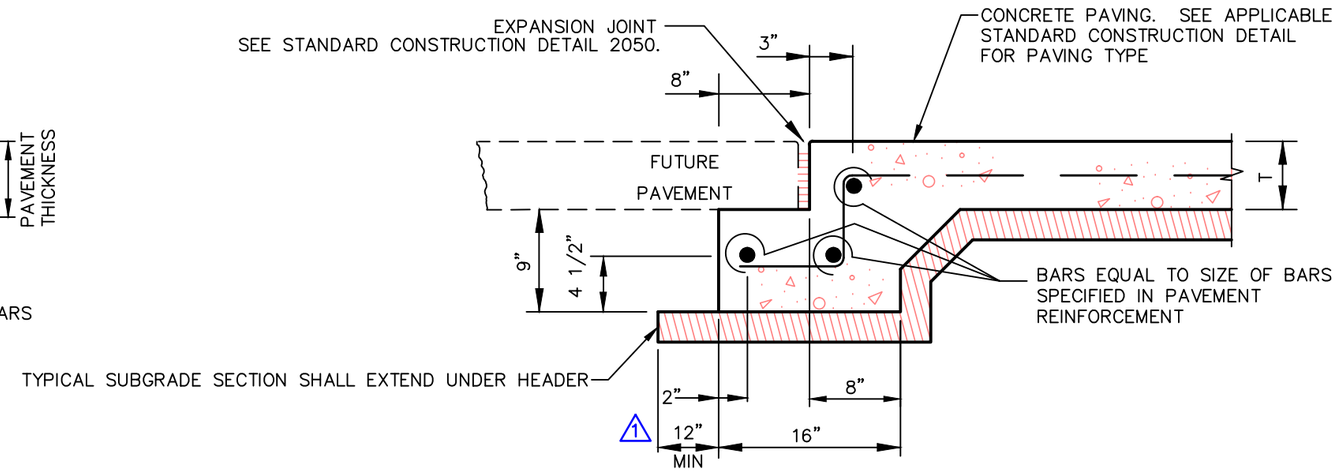

STREET HEADER FOR FUTURE PAVEMENT

N.T.S.

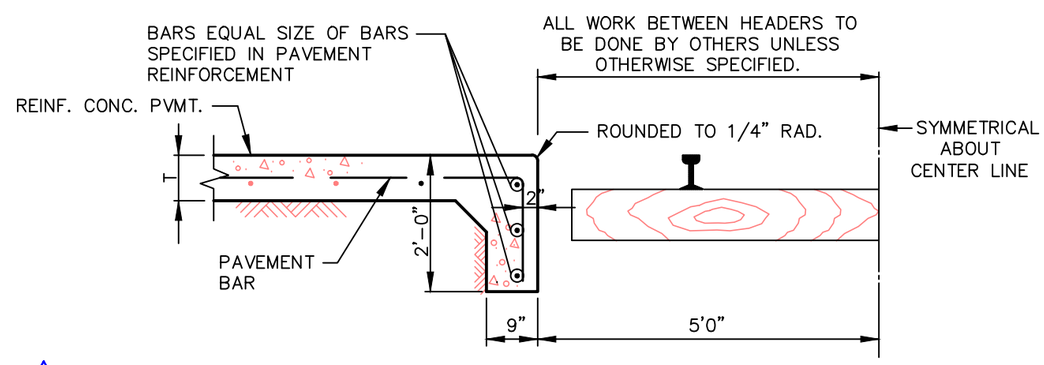

2 STREET HEADER AT RAILROAD, OR AS APPROVED BY RAILROAD OWNER

N.T.S.

NOTES:

1. PAVEMENT BARS TO BE BENT DOWN INTO HEADER.
2. HEADER AND PAVEMENT SHALL BE MONOLITHIC.

North Central Texas Council of Governments

NOTE: STANDARDS ARE ADOPTED FROM THE NCTOG STANDARD DRAWINGS DATED NOV. '96, WITH LOCAL EXCEPTIONS.

NO.	LOCAL EXCEPTION	BY	DATE
2	REVISED RAILROAD HEADER TITLE	SWL	JUL. '14
1	ADDED 12" DIMENSION	SWL	JUL. '14

THE CITY OF COPPELL TEXAS 1890

STANDARD CONSTRUCTION DETAILS

REINFORCED CONCRETE PAVEMENT STREET HEADERS

CITY OF COPPELL DALLAS COUNTY, TEXAS

STD. SPEC. REFERENCE 303., 305., 401.

STANDARD DETAIL 2070

PATH: S:\Standard_Details\New_Dets_modified\SDCoppell2005.dwg

NOTES:

1. ASPHALT PAVING BETWEEN CONCRETE CURB/GUTTER SHALL CONSIST OF A TYPE "B" BASE COURSE AND A TYPE "D" TOP COURSE. PAVING SHALL BE OF SUFFICIENT STRENGTH TO SUPPORT A CONCENTRATED LOAD OF 40,000 POUNDS.
2. CURB HEIGHT AND WIDTH SHALL BE 6", OR AS SPECIFIED BY CITY. SEE STANDARD CONSTRUCTION DETAIL 2120.
3. SUBGRADE (MIN. REQUIREMENTS–UNLESS OTHERWISE APPROVED BY CITY ENGINEER). SUBGRADE UNDER ALL PAVEMENT SHALL BE INITIALLY MIXED 8" THICK AND RE–MIXED 6" THICK AND SHALL BE STABILIZED WITH 6% MIN. BY WEIGHT OF HYDRATED LIME (GENERALLY ±40 LBS./S.Y.) AND COMPACTED TO A DENSITY NOT LESS THAN 95% STANDARD PROCTOR DENSITY. ALTERNATIVE SUBGRADES, SUPPORTED BY LABORATORY TESTS, MAY BE SUBMITTED TO THE CITY ENGINEER FOR APPROVAL.
4. PAVEMENT SURFACE FINISH SHALL BE SMOOTH AND UNIFORM. EACH PAVING COURSE SHALL HAVE A DENSITY OF NOT LESS THAN 95% OF THE STANDARD DENSITY ESTABLISHED BY THE TEXAS DEPARTMENT OF TRANSPORTATION BULLETIN C–14.
5. ALL DIMENSIONS TO BACK OF CURB AND IN FEET UNLESS OTHERWISE SHOWN.
6. FOR TRANSVERSE JOINT SPACING, SEE STANDARD CONSTRUCTION DETAIL 2060.
7. ASPHALT PAVING IS PERMITTED ONLY WITHIN THE HISTORIC OVERLAY ZONING DISTRICT AND ONLY WHEN AUTHORIZED BY A SPECIAL USE PERMIT (S.U.P.) APPROVED BY THE CITY COUNCIL.
8. ASPHALT PAVING NOT PERMITTED FOR NEW CONSTRUCTION OUTSIDE OF THE HISTORIC OVERLAY ZONING DISTRICT.

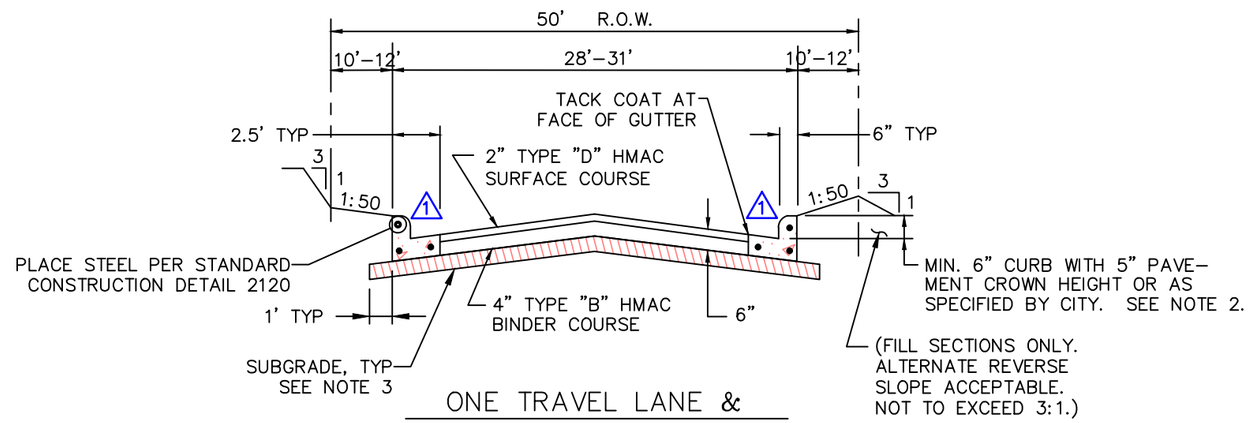

ONE TRAVEL LANE & TWO PARKING LANES

N.T.S.

North Central Texas Council of Governments

NOTE: STANDARDS ARE ADOPTED FROM THE NCTOG STANDARD DRAWINGS DATED NOV. '96, WITH LOCAL EXCEPTIONS.

NO.	LOCAL EXCEPTION	BY	DATE
1	ADDED NO. 4 BAR TO CURB	SWL	JUL. '14

THE CITY OF COPPELL TEXAS 1890

STANDARD CONSTRUCTION DETAILS

HOT MIX ASPHALTIC CONCRETE PAVEMENT
TWO LANE UNDIVIDED THOROUGHFARE

CITY OF COPPELL DALLAS COUNTY, TEXAS

STD. SPEC. REFERENCE
301., 302., 305.

STANDARD DETAIL
2110

PATH: S:\Standard_Details\New_Dets_modified\SDCoppell2005.dwg

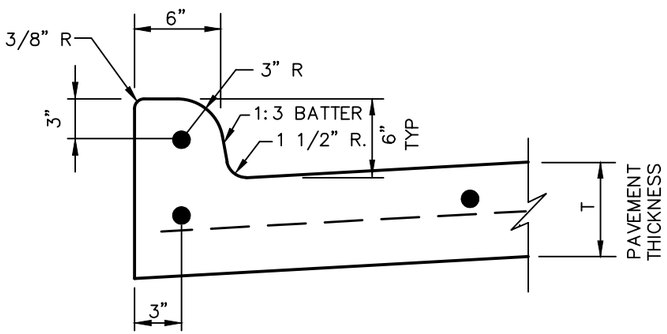

INTEGRAL CURB AND GUTTER

N.T.S.

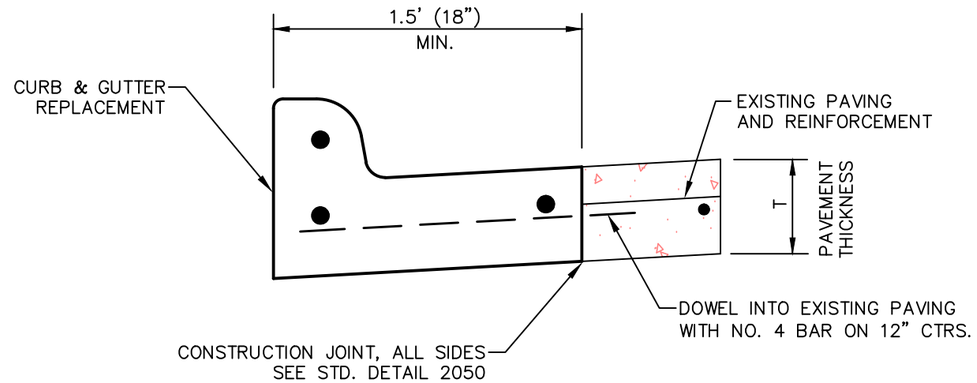

3 CURB AND GUTTER REPAIR

N.T.S.

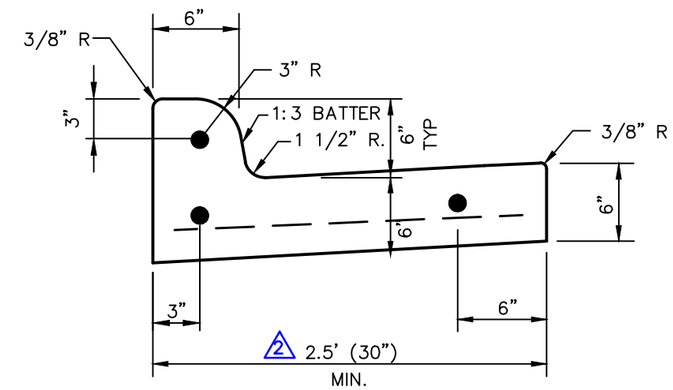

SEPARATE CURB & GUTTER

N.T.S.

NOTES:

1 1. REINFORCEMENT SHALL BE NO. 4 BARS UNLESS OTHERWISE SPECIFIED.
2. CONCRETE SHALL BE CLASS "C" UNLESS OTHERWISE SPECIFIED.

North Central Texas Council of Governments

NOTE: STANDARDS ARE ADOPTED FROM THE NCTOG STANDARD DRAWINGS DATED NOV. '96, WITH LOCAL EXCEPTIONS.

NO.	LOCAL EXCEPTION	BY	DATE
3	ADD CURB & GUTTER REPAIR DETAIL	SWL	JUL. '14
2	CHANGED DIMENSION FROM 18" TYP TO 30" MIN	SWL	JUL. '14
1	CHANGED REINFORCEMENT FROM NO. 3 BARS TO NO. 4 BARS	SWL	JUL. '14

THE CITY OF COPPELL TEXAS 1890

STANDARD CONSTRUCTION DETAILS

CONCRETE CURB AND GUTTER
INTEGRAL AND SEPARATE

CITY OF COPPELL DALLAS COUNTY, TEXAS

STD. SPEC. REFERENCE
303., 305.

STANDARD DETAIL
2120

PATH: S:\Standard_Details\New_Dets_modified\SDCoppell2005.dwg

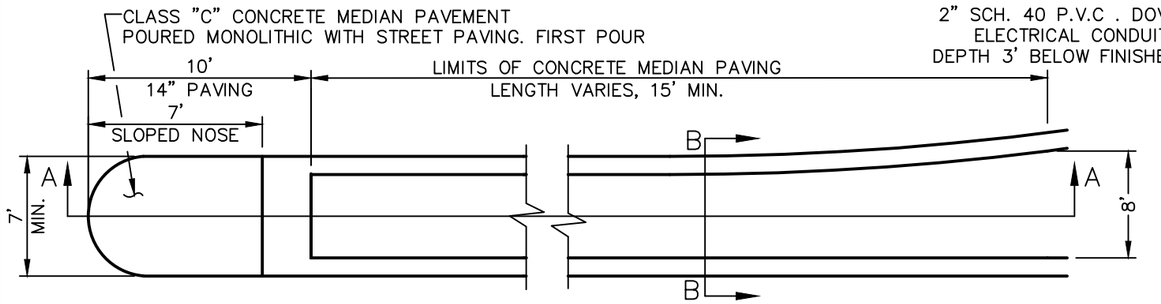

LEFT TURN LANE MEDIAN PAVEMENT, FIRST POUR

N.T.S.

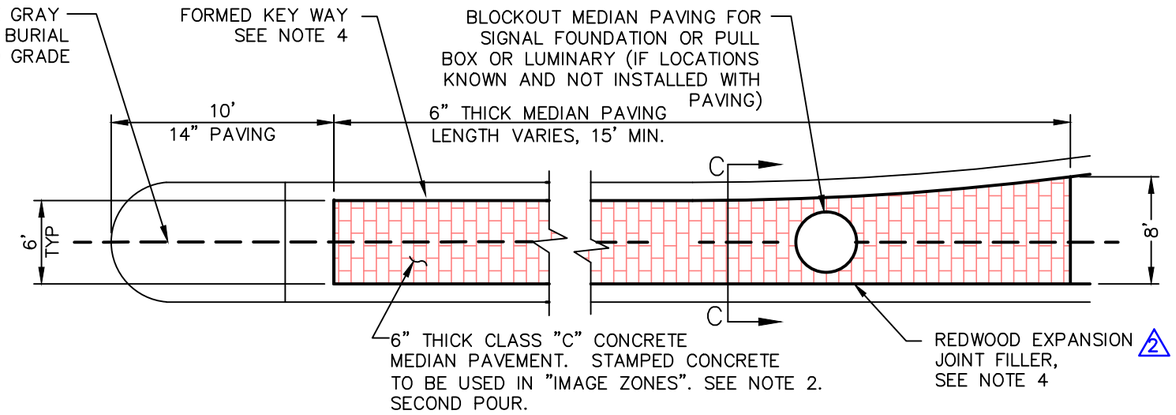

LEFT TURN LANE MEDIAN PAVEMENT, SECOND POUR

N.T.S.

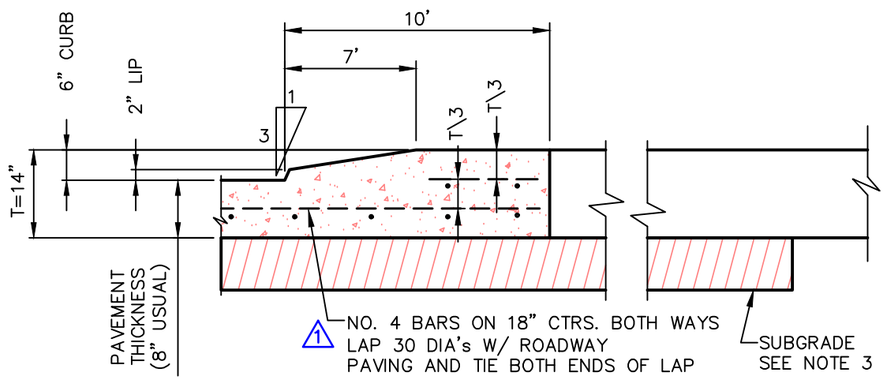

SECTION A–A

N.T.S.

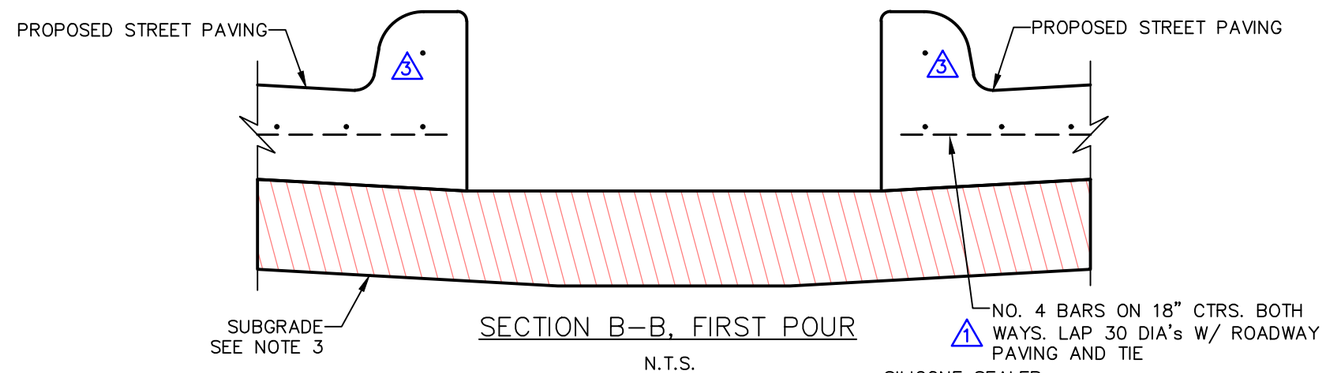

SECTION B–B, FIRST POUR

N.T.S.

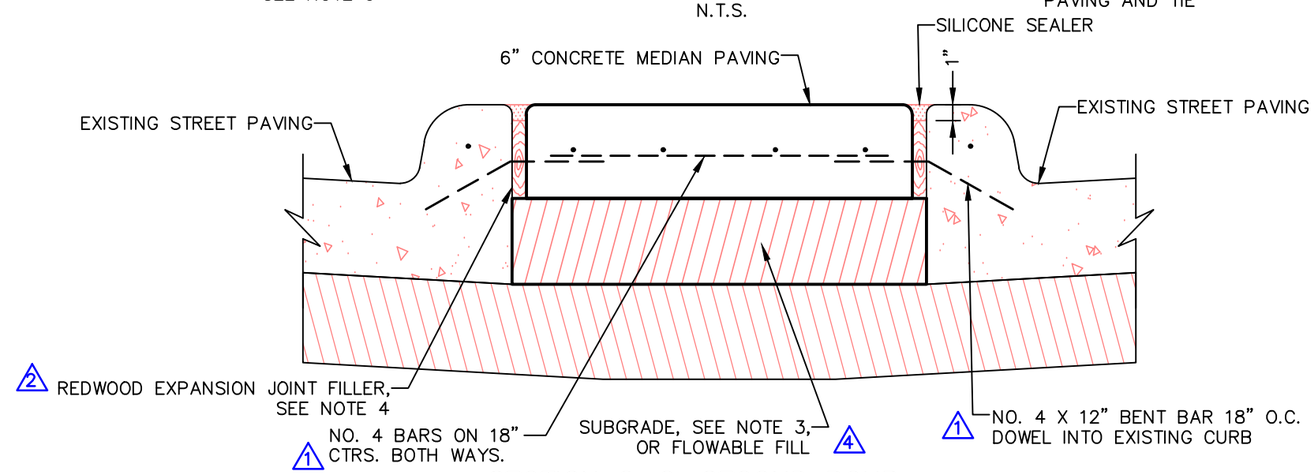

SECTION C–C, SECOND POUR

N.T.S.

NOTES:

1. ALL DIMENSIONS TO BACK OF CURB AND IN FEET UNLESS OTHERWISE SHOWN
2. STAMPED, COLORED CONCRETE MEDIAN PAVING SHALL BE USED IN CONSTRUCTION LOCATIONS DESIGNATED AS "IMAGE ZONES" BY THE STREETSCAPE PLAN SECTION OF THE CITY OF COPPELL SUBDIVISION ORDINANCE AND THE CITY OF COPPELL STAMPED CONCRETE ORDINANCE 2002–979. STANDARD CONCRETE MEDIAN PAVING SHALL BE USED IN LOCATIONS THAT ARE NOT DESIGNATED AS "IMAGE ZONES".
3. SUBGRADE (MIN. REQUIREMENTS–UNLESS OTHERWISE APPROVED BY CITY ENGINEER). SUBGRADE UNDER ALL PAVEMENT SHALL BE INITIALLY MIXED 8" THICK AND RE–MIXED 6" THICK AND SHALL BE STABILIZED WITH 6% MIN. BY WEIGHT OF HYDRATED LIME (GENERALLY ±40 LBS./S.Y.) AND COMPACTED TO A DENSITY NOT LESS THAN 95% STANDARD PROCTOR DENSITY. ALTERNATIVE SUBGRADES, SUPPORTED BY LABORATORY TESTS, MAY BE SUBMITTED TO THE CITY ENGINEER FOR APPROVAL.
4. (2) SEE STANDARD CONSTRUCTION DETAIL 2050 FOR JOINT SEALING DETAIL.
5. MEDIAN PAVING SHALL EXTEND TO POINT WHERE MEDIAN IS 8' WIDE B–B. IF MEDIAN IS 8' WIDE OR GREATER, PAVING SHALL EXTEND 15' FROM NOSE.

North Central Texas Council of Governments

NOTE: STANDARDS ARE ADOPTED FROM THE NCTOG STANDARD DRAWINGS DATED NOV. '96, WITH LOCAL EXCEPTIONS.

NO.	LOCAL EXCEPTION	BY	DATE
4	ADD OPTION TO SUBSTITUTE FLOWABLE FILL FOR SUBGRADE.	SWL	JUL. '14
3	ADDED NO. 4 BAR TO CURB	SWL	JUL. '14
2	CHANGED FROM KEYWAY TO JOINT WITH REDWOOD EXPANSION FILLER.	SWL	JUL. '14
1	CHANGED BAR SIZE FROM NO. 3 TO NO. 4	SWL	JUL. '14

THE CITY OF COPPELL TEXAS 1890

STANDARD CONSTRUCTION DETAILS

MEDIAN ISLAND PAVEMENT

LEFT TURN LANE WITH SLOPE-END NOSE

CITY OF COPPELL DALLAS COUNTY, TEXAS

STD. SPEC. REFERENCE

301., 303., 305.

STANDARD DETAIL

2130

PATH: S:\Standard_Details\New_Dets_modified\SDCoppell2005.dwg

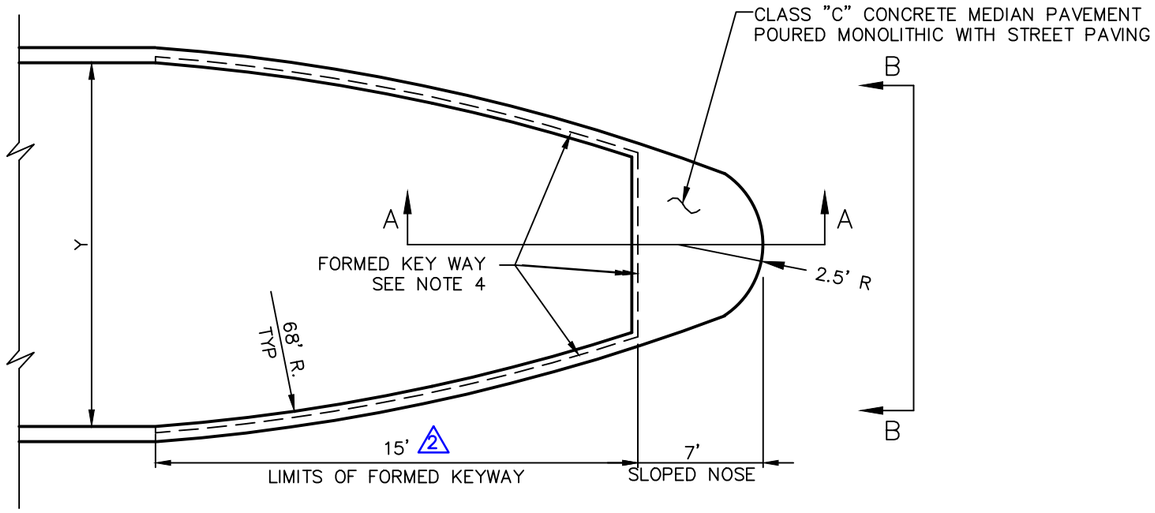

CONCRETE NOSE FOR MEDIAN ISLAND, FIRST POUR

N.T.S.

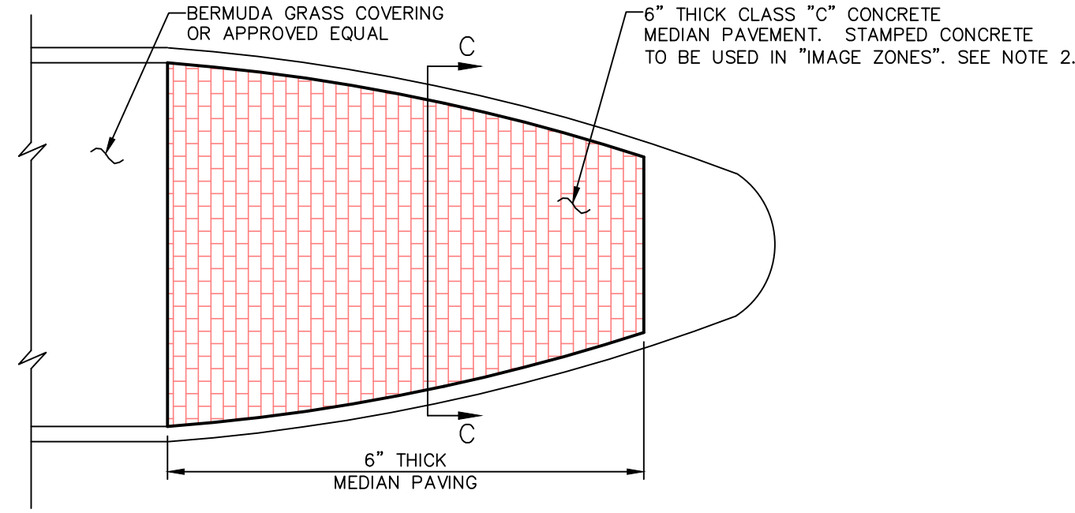

CONCRETE NOSE FOR MEDIAN ISLAND, SECOND POUR

N.T.S.

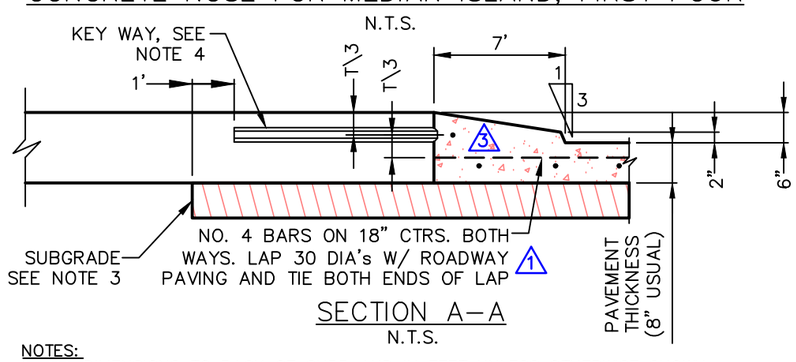

SECTION A–A

N.T.S.

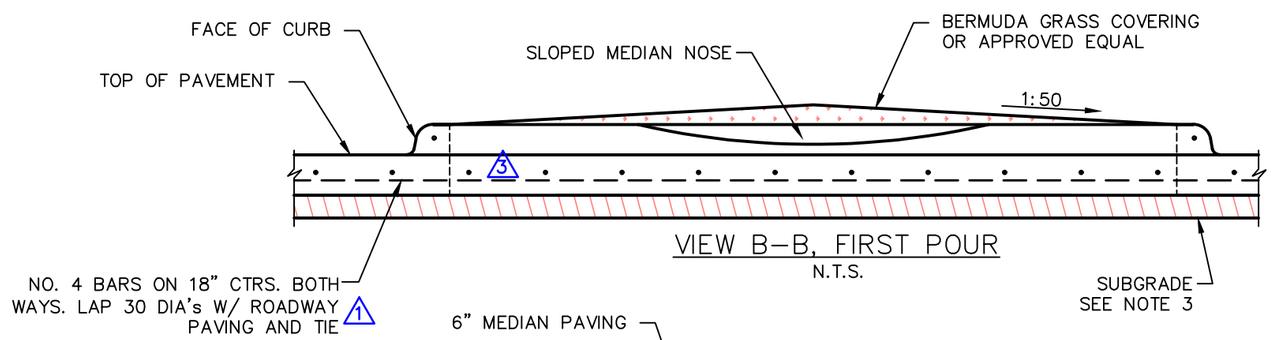

VIEW B–B, FIRST POUR

N.T.S.

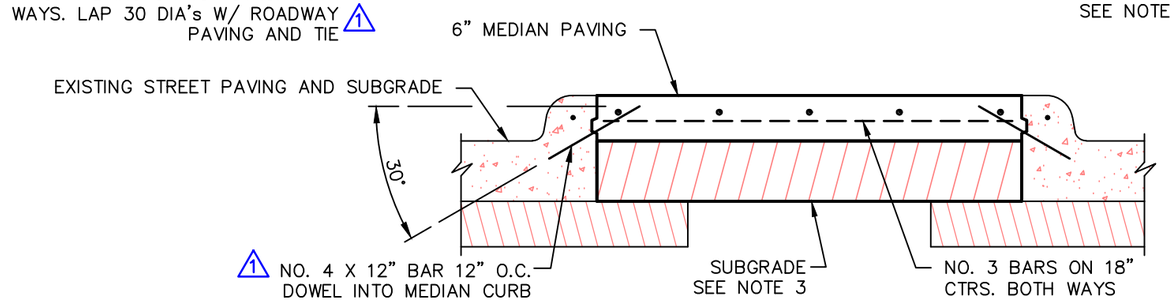

SECTION C–C, SECOND POUR

N.T.S.

NOTES:

1. ALL DIMENSIONS TO BACK OF CURB AND IN FEET UNLESS OTHERWISE SHOWN
2. STAMPED, COLORED CONCRETE MEDIAN PAVING SHALL BE USED IN CONSTRUCTION LOCATIONS DESIGNATED AS "IMAGE ZONES" BY THE STREETSCAPE PLAN SECTION OF THE CITY OF COPPELL SUBDIVISION ORDINANCE AND THE CITY OF COPPELL STAMPED CONCRETE ORDINANCE 2002–979. STANDARD CONCRETE MEDIAN PAVING SHALL BE USED IN LOCATIONS THAT ARE NOT DESIGNATED AS "IMAGE ZONES".
3. SUBGRADE (MIN. REQUIREMENTS–UNLESS OTHERWISE APPROVED BY CITY ENGINEER). SUBGRADE UNDER ALL PAVEMENT SHALL BE INITIALLY MIXED 8" THICK AND RE–MIXED 6" THICK AND SHALL BE STABILIZED WITH 6% MIN. BY WEIGHT OF HYDRATED LIME (GENERALLY ±40 LBS./S.Y.) AND COMPACTED TO A DENSITY NOT LESS THAN 95% STANDARD PROCTOR DENSITY. ALTERNATIVE SUBGRADES, SUPPORTED BY LABORATORY TESTS, MAY BE SUBMITTED TO THE CITY ENGINEER FOR APPROVAL.
4. SEE STANDARD CONSTRUCTION DETAIL 2050 FOR KEY WAY DIMENSIONS

North Central Texas Council of Governments

NOTE: STANDARDS ARE ADOPTED FROM THE NCTOG STANDARD DRAWINGS DATED NOV. '96, WITH LOCAL EXCEPTIONS.

NO.	LOCAL EXCEPTION	BY	DATE
3	ADDED BARS TO VIEW AND SECTION	SWL	JUL. '14
2	CHANGED LENGTH OF KEYWAY FROM VARIABLE TO 15'	SWL	JUL. '14
1	CHANGED BAR SIZE FROM NO. 3 TO NO. 4	SWL	JUL. '14

THE CITY OF COPPELL TEXAS 1890

STANDARD CONSTRUCTION DETAILS

MEDIAN ISLAND PAVEMENT

MEDIAN ISLAND WITH SLOPE-END NOSE

CITY OF COPPELL DALLAS COUNTY, TEXAS

STD. SPEC. REFERENCE

301., 303., 305.

STANDARD DETAIL

2140

PATH: S:\Standard_Details\New_Dets_modified\SDCoppell2005.dwg

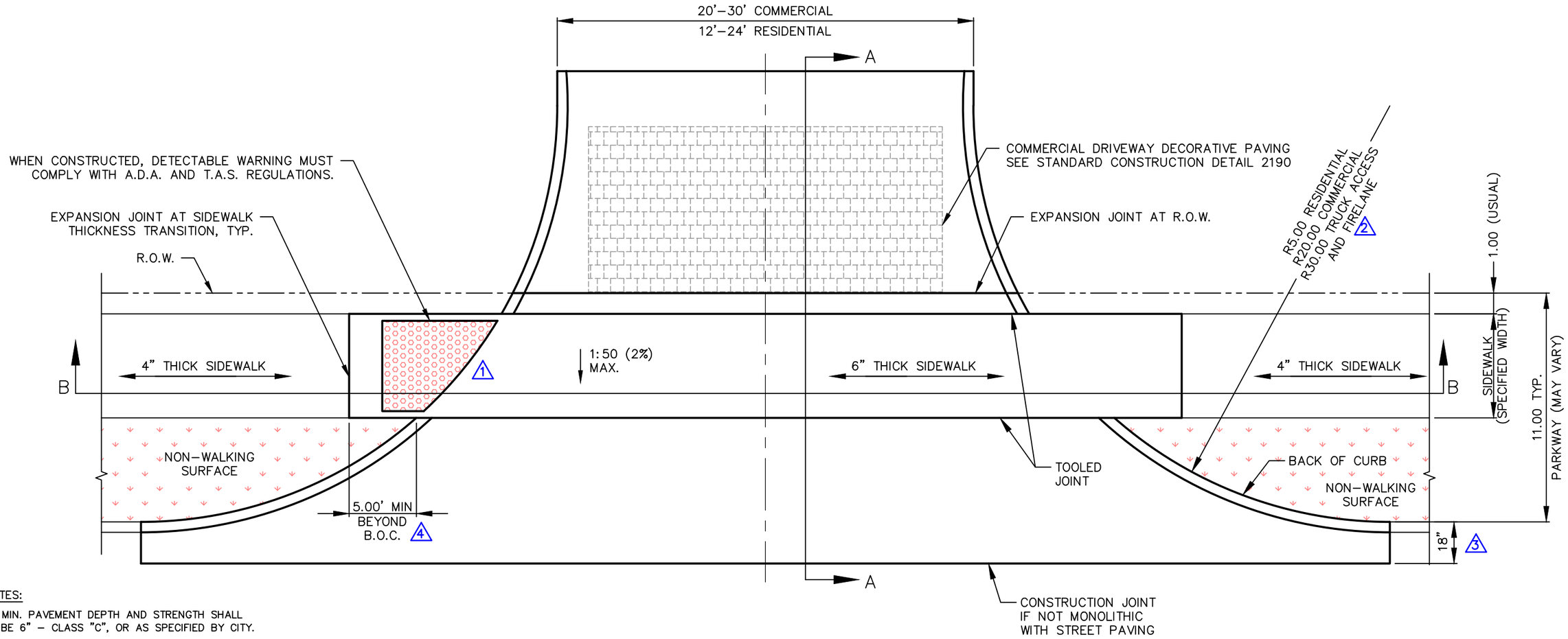

NOTES:

1. MIN. PAVEMENT DEPTH AND STRENGTH SHALL BE 6" – CLASS "C", OR AS SPECIFIED BY CITY.
2. CURB HEIGHT AND WIDTH SHALL BE 6", OR AS SPECIFIED BY CITY. SEE STANDARD CONSTRUCTION DETAIL 2120.
3. SUBGRADE (MIN. REQUIREMENTS–UNLESS OTHERWISE APPROVED BY CITY ENGINEER). SUBGRADE UNDER ALL PAVEMENT SHALL BE INITIALLY MIXED 8" THICK AND RE–MIXED 6" THICK AND SHALL BE STABILIZED WITH 6% MIN. BY WEIGHT OF HYDRATED LIME (GENERALLY ±40 LBS./S.Y.) AND COMPACTED TO A DENSITY NOT LESS THAN 95% STANDARD PROCTOR DENSITY. ALTERNATIVE SUBGRADES, SUPPORTED BY LABORATORY TESTS, MAY BE SUBMITTED TO THE CITY ENGINEER FOR APPROVAL.
4. PAVEMENT SURFACE FINISH SHALL BE TRANSVERSE TO TRAFFIC LANES AND SHALL BE BAKER BROOM FINISH UNLESS OTHERWISE SPECIFIED BY CITY.
5. ALL DIMENSIONS TO BACK OF CURB AND IN FEET UNLESS OTHERWISE SHOWN.
6. WIDTHS AND SLOPES MAY VARY. ALL ACCESSIBLE ROUTES MUST COMPLY WITH A.D.A. AND T.A.S. REGULATIONS.

North Central Texas Council of Governments

NOTE: STANDARDS ARE ADOPTED FROM THE NCTOG STANDARD DRAWINGS DATED NOV. '96, WITH LOCAL EXCEPTIONS.

NO.	LOCAL EXCEPTION	BY	DATE
4	ADD DIMENSION.	SWL	JUL. '14
3	CHANGED DIMENSION FROM 2.00' TO 18"	SWL	JUL. '14
2	ADDED 30.00' RADIUS FOR TRUCK TRAFFIC AND FIRELANE	SWL	JUL. '14
1	ADDED DETECTABLE WARNING AND CALLOUT	SWL	JUL. '14

THE CITY OF COPPELL TEXAS 1890

STANDARD CONSTRUCTION DETAILS

DRIVEWAY APPROACH TYPE "A"

CITY OF COPPELL DALLAS COUNTY, TEXAS

STD. SPEC. REFERENCE 301., 303., 305.

STANDARD DETAIL 2150-1

PATH: S:\Standard_Details\New_Dets_modified\SDCoppell2005.dwg

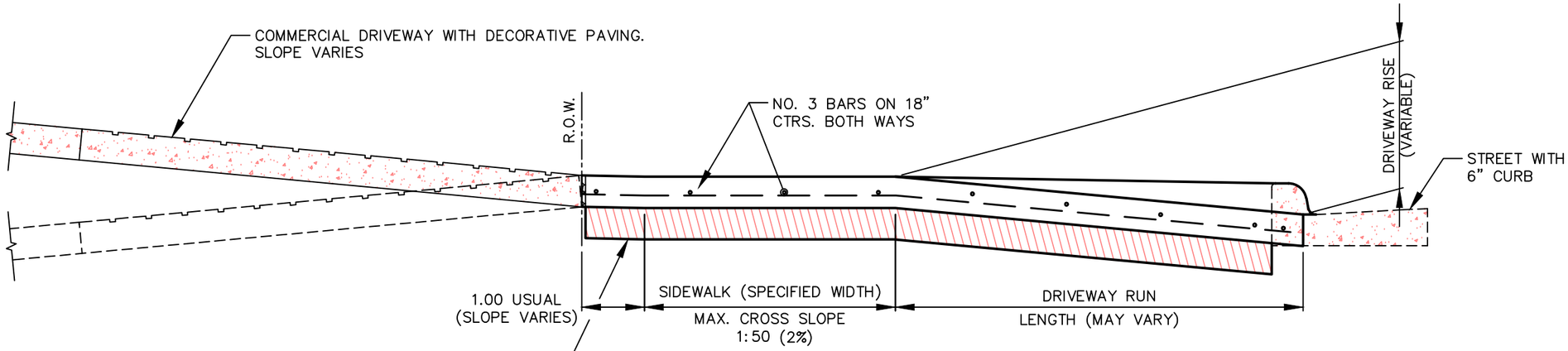

SECTION A–A

N.T.S.

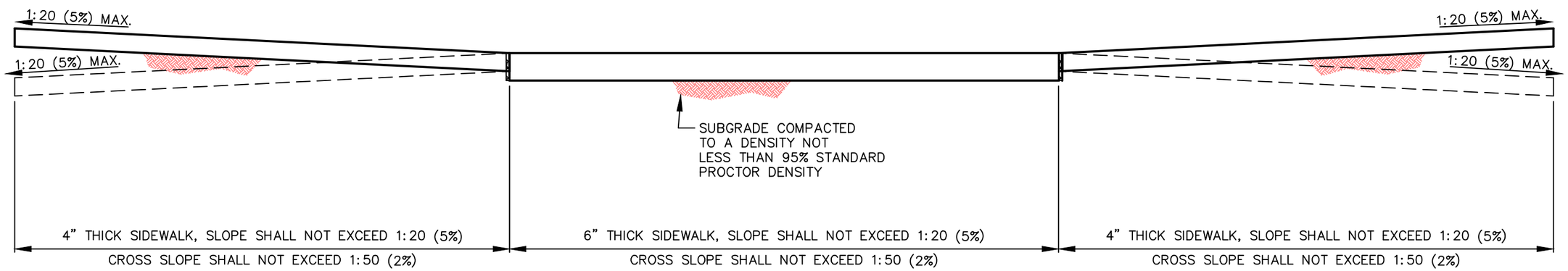

SECTION B–B

N.T.S.

NOTES: 1

1. MIN. PAVEMENT DEPTH AND STRENGTH SHALL BE 6" – CLASS "C", OR AS SPECIFIED BY CITY.
2. CURB HEIGHT AND WIDTH SHALL BE 6", OR AS SPECIFIED BY CITY. SEE STANDARD CONSTRUCTION DETAIL 2120.
3. SUBGRADE (MIN. REQUIREMENTS–UNLESS OTHERWISE APPROVED BY CITY ENGINEER). SUBGRADE UNDER ALL PAVEMENT SHALL BE INITIALLY MIXED 8" THICK AND RE–MIXED 6" THICK AND SHALL BE STABILIZED WITH 6% MIN. BY WEIGHT OF HYDRATED LIME (GENERALLY ±40 LBS./S.Y.) AND COMPACTED TO A DENSITY NOT LESS THAN 95% STANDARD PROCTOR DENSITY. ALTERNATIVE SUBGRADES, SUPPORTED BY LABORATORY TESTS, MAY BE SUBMITTED TO THE CITY ENGINEER FOR APPROVAL.

North Central Texas Council of Governments

NOTE: STANDARDS ARE ADOPTED FROM THE NCTOG STANDARD DRAWINGS DATED NOV. '96, WITH LOCAL EXCEPTIONS.

NO.	LOCAL EXCEPTION	BY	DATE
1	ADDED NOTES	SWL	JUL. '14

THE CITY OF COPPELL TEXAS 1890

STANDARD CONSTRUCTION DETAILS

DRIVEWAY APPROACH
TYPE "A"

CITY OF COPPELL DALLAS COUNTY, TEXAS

STD. SPEC. REFERENCE
301., 303., 305.

STANDARD DETAIL
2150-2

PATH: S:\Standard_Details\New_Dets_modified\SDCoppell2005.dwg

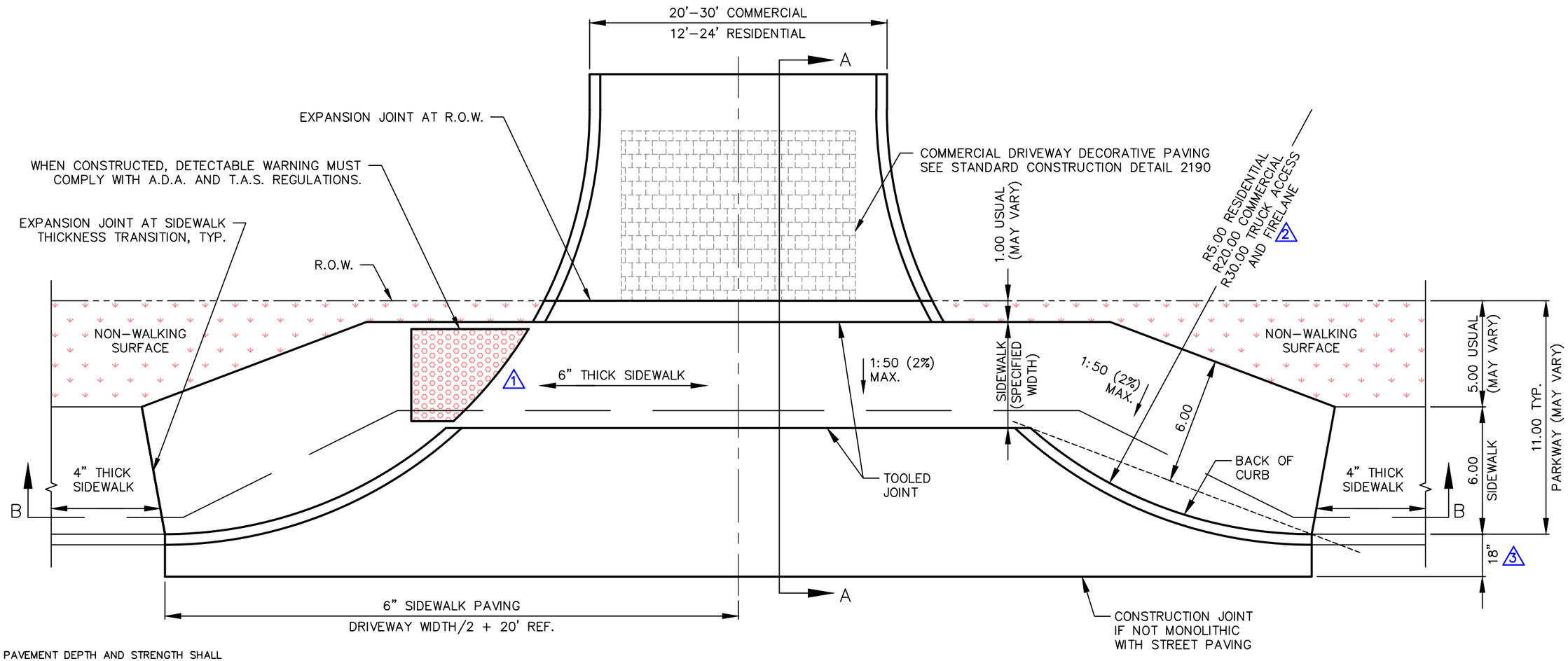

NOTES:

1. MIN. PAVEMENT DEPTH AND STRENGTH SHALL BE 6" – CLASS "C", OR AS SPECIFIED BY CITY.
2. CURB HEIGHT AND WIDTH SHALL BE 6", OR AS SPECIFIED BY CITY. SEE STANDARD CONSTRUCTION DETAIL 2120.
3. SUBGRADE (MIN. REQUIREMENTS–UNLESS OTHERWISE APPROVED BY CITY ENGINEER). SUBGRADE UNDER ALL PAVEMENT SHALL BE INITIALLY MIXED 8" THICK AND RE–MIXED 6" THICK AND SHALL BE STABILIZED WITH 6% MIN. BY WEIGHT OF HYDRATED LIME (GENERALLY ±40 LBS./S.Y.) AND COMPACTED TO A DENSITY NOT LESS THAN 95% STANDARD PROCTOR DENSITY. ALTERNATIVE SUBGRADES, SUPPORTED BY LABORATORY TESTS, MAY BE SUBMITTED TO THE CITY ENGINEER FOR APPROVAL.
4. PAVEMENT SURFACE FINISH SHALL BE TRANSVERSE TO TRAFFIC LANES AND SHALL BE BAKER BROOM FINISH UNLESS OTHERWISE SPECIFIED BY CITY.
5. ALL DIMENSIONS TO BACK OF CURB AND IN FEET UNLESS OTHERWISE SHOWN.
6. WIDTHS AND SLOPES MAY VARY. ALL ACCESSIBLE ROUTES MUST COMPLY WITH A.D.A. AND T.A.S. REGULATIONS.

North Central Texas Council of Governments

NOTE: STANDARDS ARE ADOPTED FROM THE NCTOG STANDARD DRAWINGS DATED NOV. '96, WITH LOCAL EXCEPTIONS.

NO.	LOCAL EXCEPTION	BY	DATE
3	CHANGED DIMENSION FROM 2.00' TO 18"	SWL	JUL. '14
2	ADDED 30.00' RADIUS FOR TRUCK TRAFFIC AND FIRELANE	SWL	JUL. '14
1	ADDED DETECTABLE WARNING AND CALLOUT	SWL	JUL. '14

THE CITY OF COPPELL TEXAS 1890

STANDARD CONSTRUCTION DETAILS

DRIVEWAY APPROACH TYPE "B"

CITY OF COPPELL DALLAS COUNTY, TEXAS

STD. SPEC. REFERENCE 301., 303., 305.

STANDARD DETAIL 2155-1

PATH: S:\Standard_Details\New_Dets_modified\SDCoppell2005.dwg

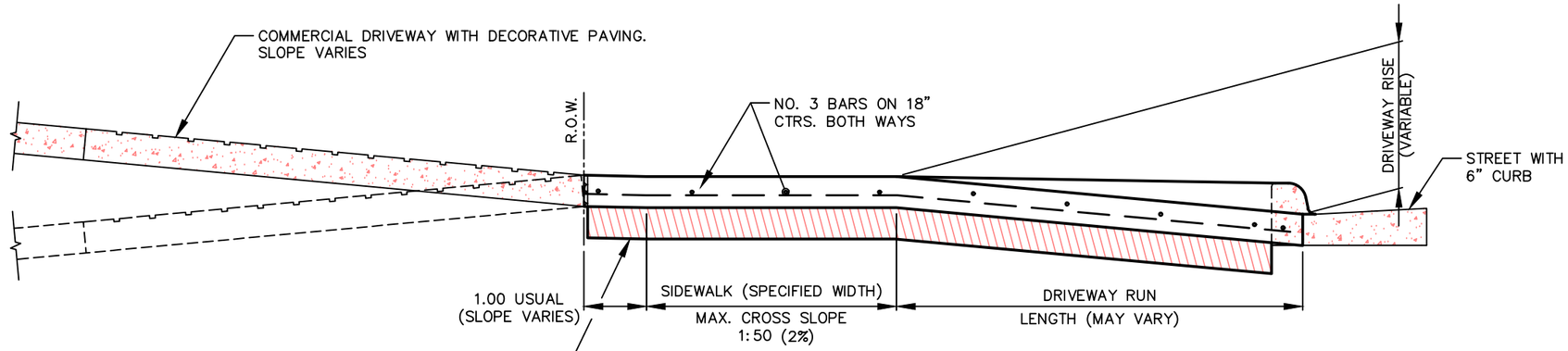

SECTION A–A

N.T.S.

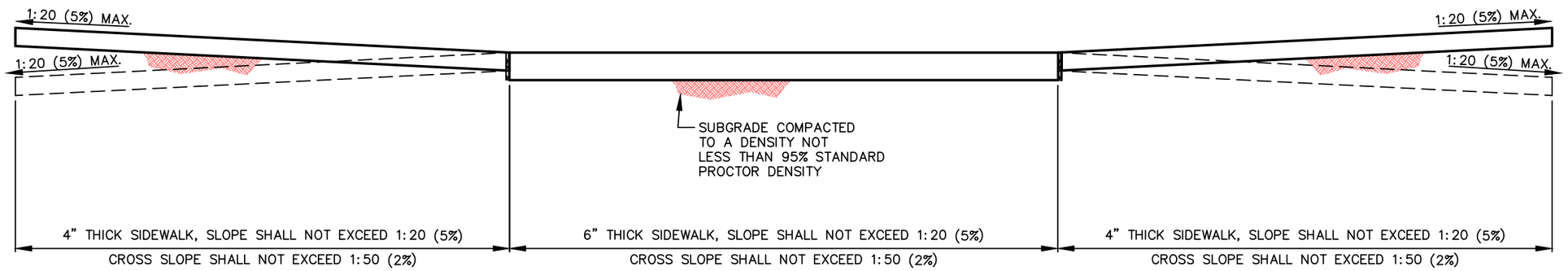

SECTION B–B

N.T.S.

NOTES: 1

1. MIN. PAVEMENT DEPTH AND STRENGTH SHALL BE 6" – CLASS "C", OR AS SPECIFIED BY CITY.
2. CURB HEIGHT AND WIDTH SHALL BE 6", OR AS SPECIFIED BY CITY. SEE STANDARD CONSTRUCTION DETAIL 2120.
3. SUBGRADE (MIN. REQUIREMENTS–UNLESS OTHERWISE APPROVED BY CITY ENGINEER). SUBGRADE UNDER ALL PAVEMENT SHALL BE INITIALLY MIXED 8" THICK AND RE–MIXED 6" THICK AND SHALL BE STABILIZED WITH 6% MIN. BY WEIGHT OF HYDRATED LIME (GENERALLY ±40 LBS./S.Y.) AND COMPACTED TO A DENSITY NOT LESS THAN 95% STANDARD PROCTOR DENSITY. ALTERNATIVE SUBGRADES, SUPPORTED BY LABORATORY TESTS, MAY BE SUBMITTED TO THE CITY ENGINEER FOR APPROVAL.

North Central Texas Council of Governments

NOTE: STANDARDS ARE ADOPTED FROM THE NCTOG STANDARD DRAWINGS DATED NOV. '96, WITH LOCAL EXCEPTIONS.

NO.	LOCAL EXCEPTION	BY	DATE
1	ADDED NOTES	SWL	JUL. '14

THE CITY OF COPPELL TEXAS 1890

STANDARD CONSTRUCTION DETAILS

DRIVEWAY APPROACH
TYPE "B"

CITY OF COPPELL DALLAS COUNTY, TEXAS

STD. SPEC. REFERENCE
301., 303., 305.

STANDARD DETAIL
2155-2

PATH: S:\Standard_Details\New_Dets_modified\SDCoppell2005.dwg

NOTES:

1. MIN. PAVEMENT DEPTH AND STRENGTH SHALL BE 6" – CLASS "C", OR AS SPECIFIED BY CITY.
2. CURB HEIGHT AND WIDTH SHALL BE 6", OR AS SPECIFIED BY CITY. SEE STANDARD CONSTRUCTION DETAIL 2120.
3. SUBGRADE (MIN. REQUIREMENTS–UNLESS OTHERWISE APPROVED BY CITY ENGINEER). SUBGRADE UNDER ALL PAVEMENT SHALL BE INITIALLY MIXED 8" THICK AND RE–MIXED 6" THICK AND SHALL BE STABILIZED WITH 6% MIN. BY WEIGHT OF HYDRATED LIME (GENERALLY ±40 LBS./S.Y.) AND COMPACTED TO A DENSITY NOT LESS THAN 95% STANDARD PROCTOR DENSITY. ALTERNATIVE SUBGRADES, SUPPORTED BY LABORATORY TESTS, MAY BE SUBMITTED TO THE CITY ENGINEER FOR APPROVAL.
4. PAVEMENT SURFACE FINISH SHALL BE TRANSVERSE TO TRAFFIC LANES AND SHALL BE BAKER BROOM FINISH UNLESS OTHERWISE SPECIFIED BY CITY.
5. ALL DIMENSIONS TO BACK OF CURB AND IN FEET UNLESS OTHERWISE SHOWN.
6. WIDTHS AND SLOPES MAY VARY. ALL ACCESSIBLE ROUTES MUST COMPLY WITH A.D.A. AND T.A.S. REGULATIONS.

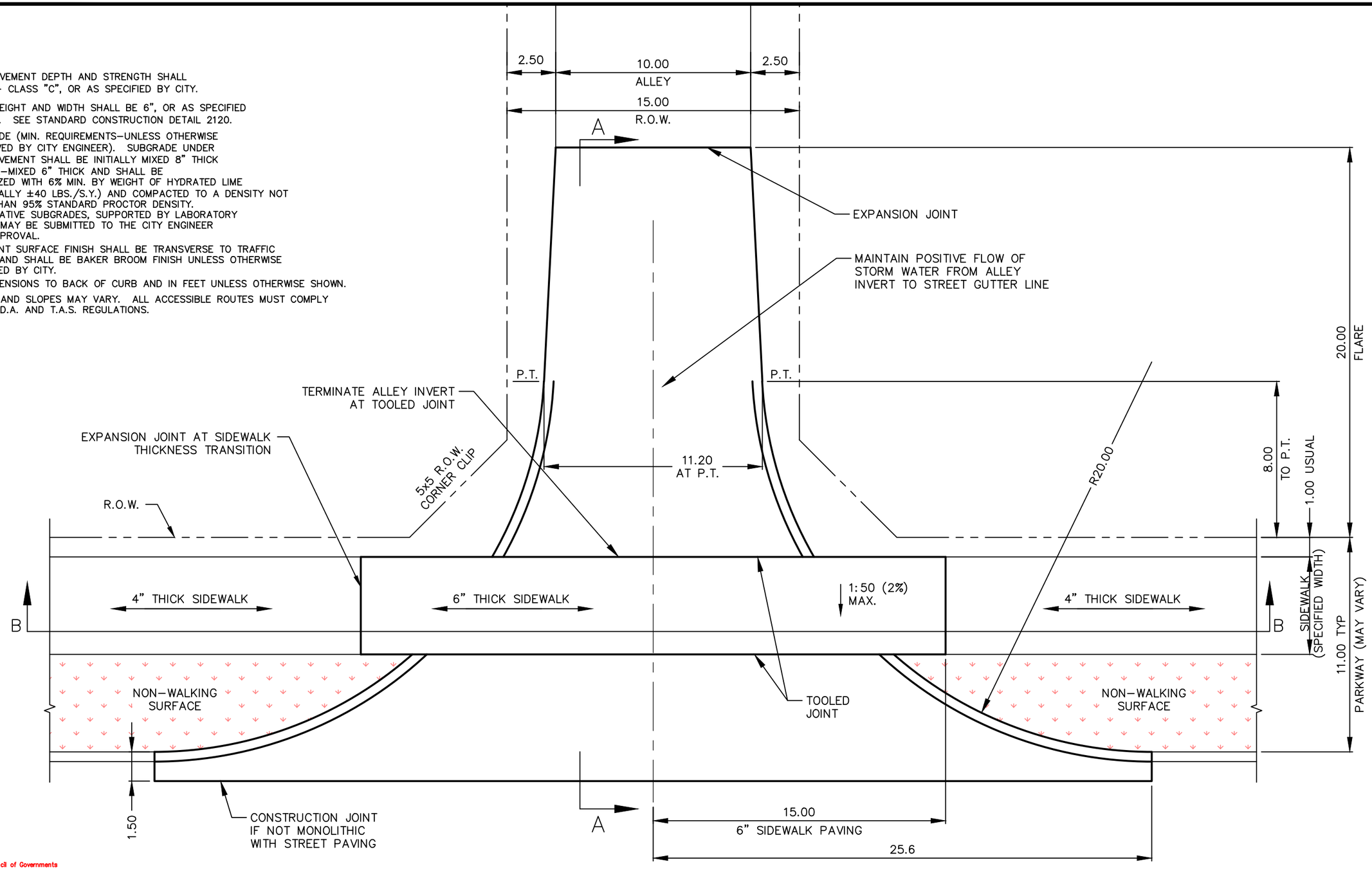

North Central Texas Council of Governments

NOTE: STANDARDS ARE ADOPTED FROM THE NCTOG STANDARD DRAWINGS DATED NOV. '96, WITH LOCAL EXCEPTIONS.

NO.	LOCAL EXCEPTION	BY	DATE

THE CITY OF COPPELL TEXAS 1890

STANDARD CONSTRUCTION DETAILS

ALLEY APPROACH
RADIUS RETURN TYPE

CITY OF COPPELL DALLAS COUNTY, TEXAS

STD. SPEC. REFERENCE
301., 303., 305.

STANDARD DETAIL
2160-1

PATH: S:\Standard_Details\New_Dets_modified\SDCoppell2005.dwg

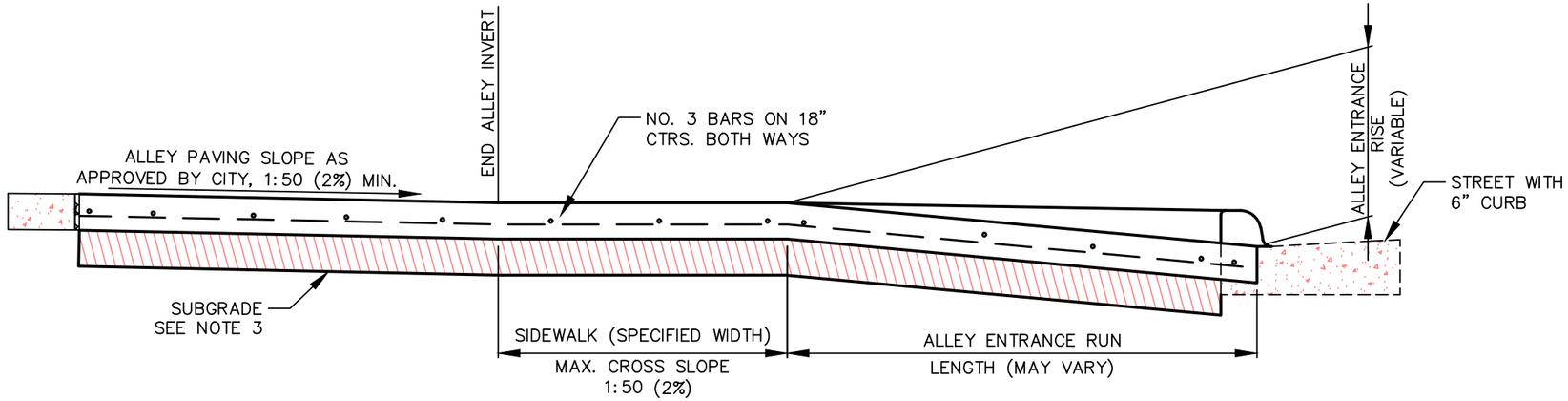

SECTION A–A

N.T.S.

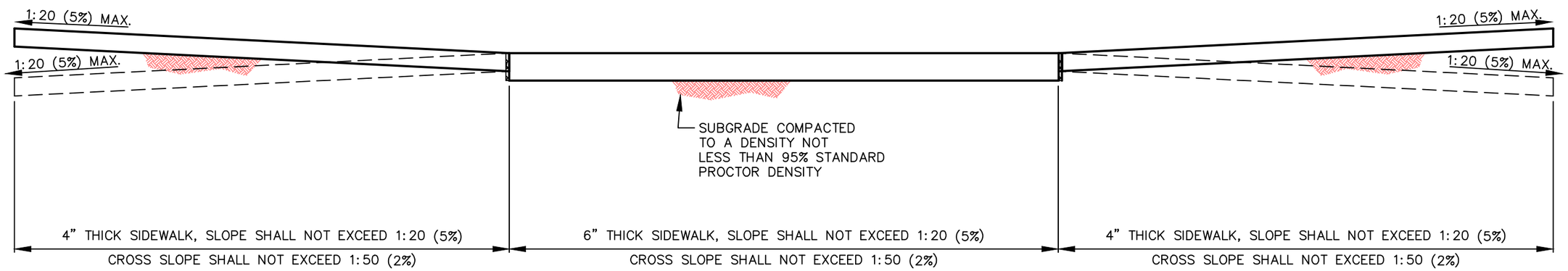

SECTION B–B

N.T.S.

NOTES: 1

1. MIN. PAVEMENT DEPTH AND STRENGTH SHALL BE 6" – CLASS "C", OR AS SPECIFIED BY CITY.
2. CURB HEIGHT AND WIDTH SHALL BE 6", OR AS SPECIFIED BY CITY. SEE STANDARD CONSTRUCTION DETAIL 2120.
3. SUBGRADE (MIN. REQUIREMENTS–UNLESS OTHERWISE APPROVED BY CITY ENGINEER). SUBGRADE UNDER ALL PAVEMENT SHALL BE INITIALLY MIXED 8" THICK AND RE–MIXED 6" THICK AND SHALL BE STABILIZED WITH 6% MIN. BY WEIGHT OF HYDRATED LIME (GENERALLY ±40 LBS./S.Y.) AND COMPACTED TO A DENSITY NOT LESS THAN 95% STANDARD PROCTOR DENSITY. ALTERNATIVE SUBGRADES, SUPPORTED BY LABORATORY TESTS, MAY BE SUBMITTED TO THE CITY ENGINEER FOR APPROVAL.

North Central Texas Council of Governments

NOTE: STANDARDS ARE ADOPTED FROM THE NCTOG STANDARD DRAWINGS DATED NOV. '96, WITH LOCAL EXCEPTIONS.

NO.	LOCAL EXCEPTION	BY	DATE
1	ADDED NOTES	SWL	JUL. '14

THE CITY OF COPPELL TEXAS 1890

STANDARD CONSTRUCTION DETAILS

ALLEY APPROACH
RADIUS RETURN TYPE

CITY OF COPPELL DALLAS COUNTY, TEXAS

STD. SPEC. REFERENCE
301., 303., 305.

STANDARD DETAIL
2160-2

PATH: S:\Standard_Details\New_Dets_modified\SDCoppell2005.dwg

NOTES:

1. MIN. PAVEMENT DEPTH AND STRENGTH SHALL BE 6" – CLASS "C", OR AS SPECIFIED BY CITY.
2. CURB HEIGHT AND WIDTH SHALL BE 6", OR AS SPECIFIED BY CITY. SEE STANDARD CONSTRUCTION DETAIL 2120.
3. SUBGRADE (MIN. REQUIREMENTS–UNLESS OTHERWISE APPROVED BY CITY ENGINEER). SUBGRADE UNDER ALL PAVEMENT SHALL BE INITIALLY MIXED 8" THICK AND RE–MIXED 6" THICK AND SHALL BE STABILIZED WITH 6% MIN. BY WEIGHT OF HYDRATED LIME (GENERALLY ±40 LBS./S.Y.) AND COMPACTED TO A DENSITY NOT LESS THAN 95% STANDARD PROCTOR DENSITY. ALTERNATIVE SUBGRADES, SUPPORTED BY LABORATORY TESTS, MAY BE SUBMITTED TO THE CITY ENGINEER FOR APPROVAL.
4. PAVEMENT SURFACE FINISH SHALL BE TRANSVERSE TO TRAFFIC LANES AND SHALL BE BAKER BROOM FINISH UNLESS OTHERWISE SPECIFIED BY CITY.
5. ALL DIMENSIONS TO BACK OF CURB AND IN FEET UNLESS OTHERWISE SHOWN.
6. WIDTHS AND SLOPES MAY VARY. ALL ACCESSIBLE ROUTES MUST COMPLY WITH A.D.A. AND T.A.S. REGULATIONS.

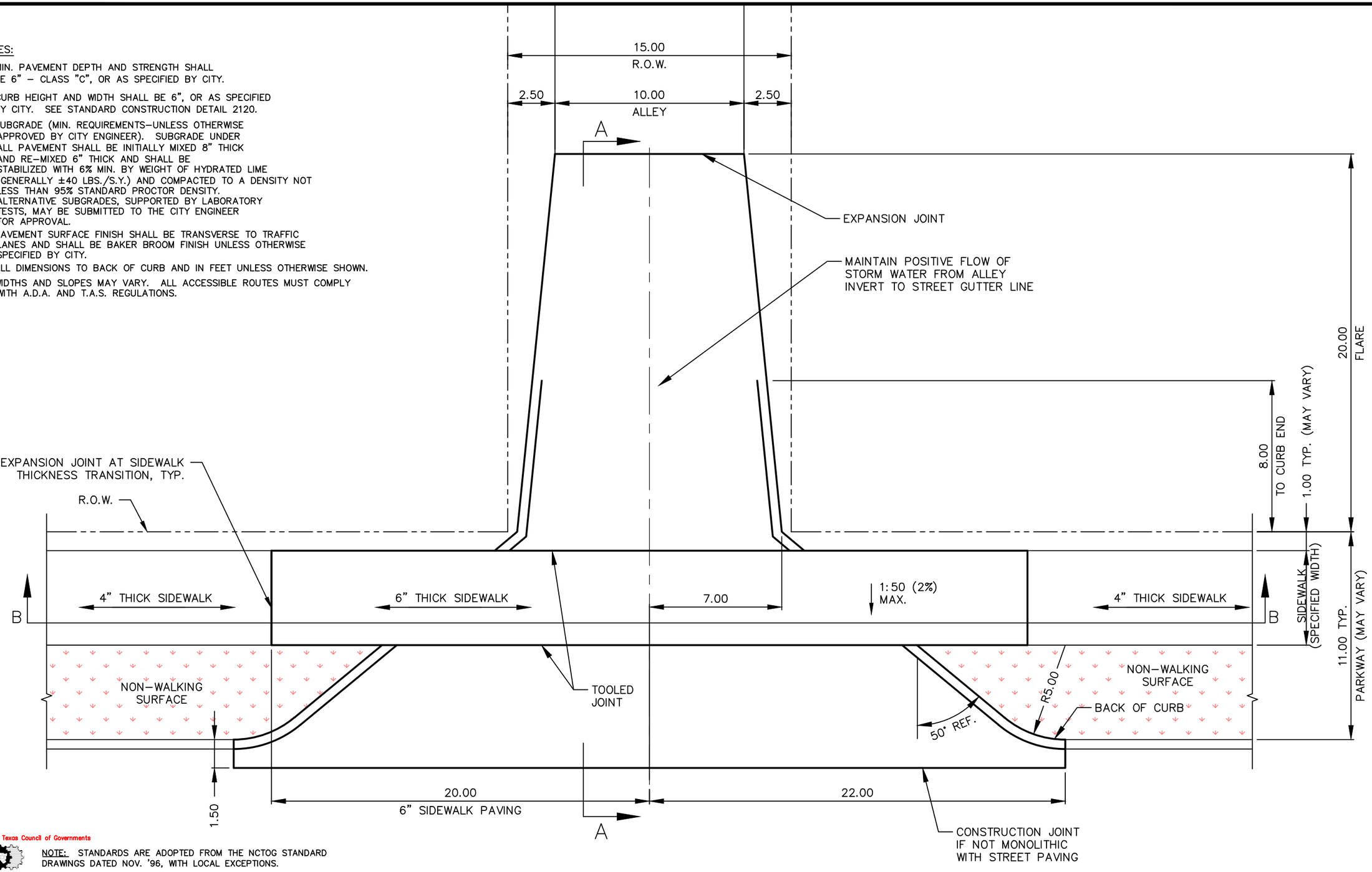

North Central Texas Council of Governments

NOTE: STANDARDS ARE ADOPTED FROM THE NCTOG STANDARD DRAWINGS DATED NOV. '96, WITH LOCAL EXCEPTIONS.

NO.	LOCAL EXCEPTION	BY	DATE

THE CITY OF COPPELL TEXAS 1890

STANDARD CONSTRUCTION DETAILS

ALLEY APPROACH REPLACEMENT
FLARED TYPE

CITY OF COPPELL DALLAS COUNTY, TEXAS

STD. SPEC. REFERENCE
301., 303., 305.

STANDARD DETAIL
2165-1

PATH: S:\Standard_Details\New_Dets_modified\SDCoppell2005.dwg

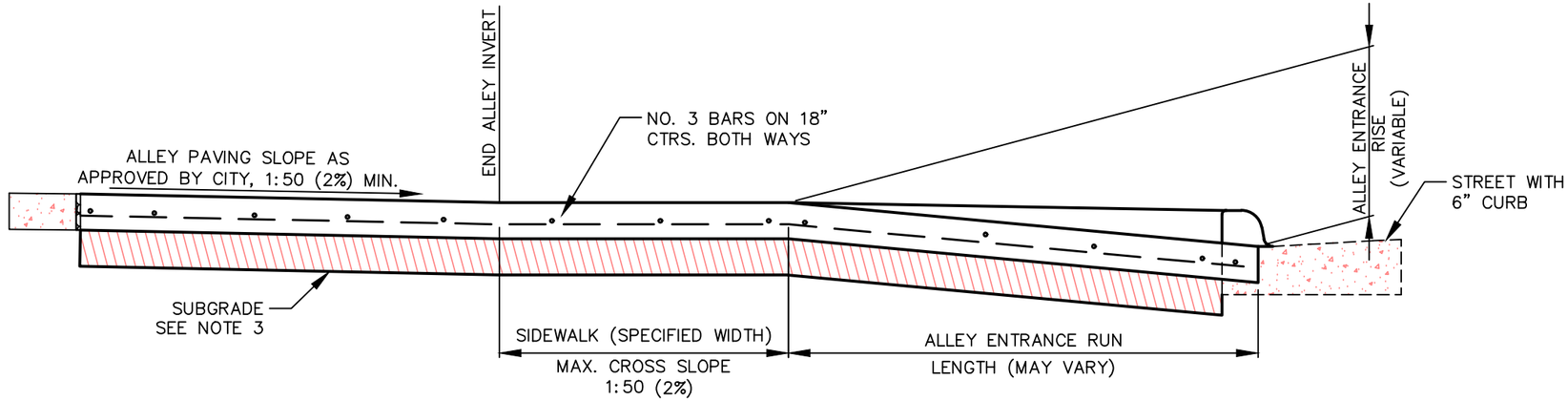

SECTION A–A

N.T.S.

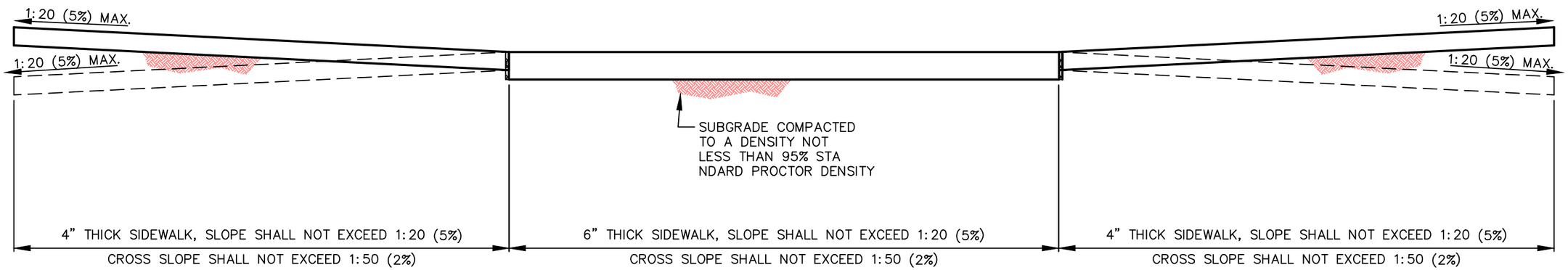

SECTION B–B

N.T.S.

NOTES: 1

1. MIN. PAVEMENT DEPTH AND STRENGTH SHALL BE 6" – CLASS "C", OR AS SPECIFIED BY CITY.
2. CURB HEIGHT AND WIDTH SHALL BE 6", OR AS SPECIFIED BY CITY. SEE STANDARD CONSTRUCTION DETAIL 2120.
3. SUBGRADE (MIN. REQUIREMENTS–UNLESS OTHERWISE APPROVED BY CITY ENGINEER). SUBGRADE UNDER ALL PAVEMENT SHALL BE INITIALLY MIXED 8" THICK AND RE–MIXED 6" THICK AND SHALL BE STABILIZED WITH 6% MIN. BY WEIGHT OF HYDRATED LIME (GENERALLY ±40 LBS./S.Y.) AND COMPACTED TO A DENSITY NOT LESS THAN 95% STANDARD PROCTOR DENSITY. ALTERNATIVE SUBGRADES, SUPPORTED BY LABORATORY TESTS, MAY BE SUBMITTED TO THE CITY ENGINEER FOR APPROVAL.

North Central Texas Council of Governments

NOTE: STANDARDS ARE ADOPTED FROM THE NCTOG STANDARD DRAWINGS DATED NOV. '96, WITH LOCAL EXCEPTIONS.

NO.	LOCAL EXCEPTION	BY	DATE
1	ADDED NOTES	SWL	JUL. '14

THE CITY OF COPPELL TEXAS 1890

STANDARD CONSTRUCTION DETAILS

ALLEY APPROACH REPLACEMENT
FLARED TYPE

CITY OF COPPELL DALLAS COUNTY, TEXAS

STD. SPEC. REFERENCE
301., 303., 305.

STANDARD DETAIL
2165-2

PATH: S:\Standard_Details\New_Dets_modified\SDCoppell2005.dwg

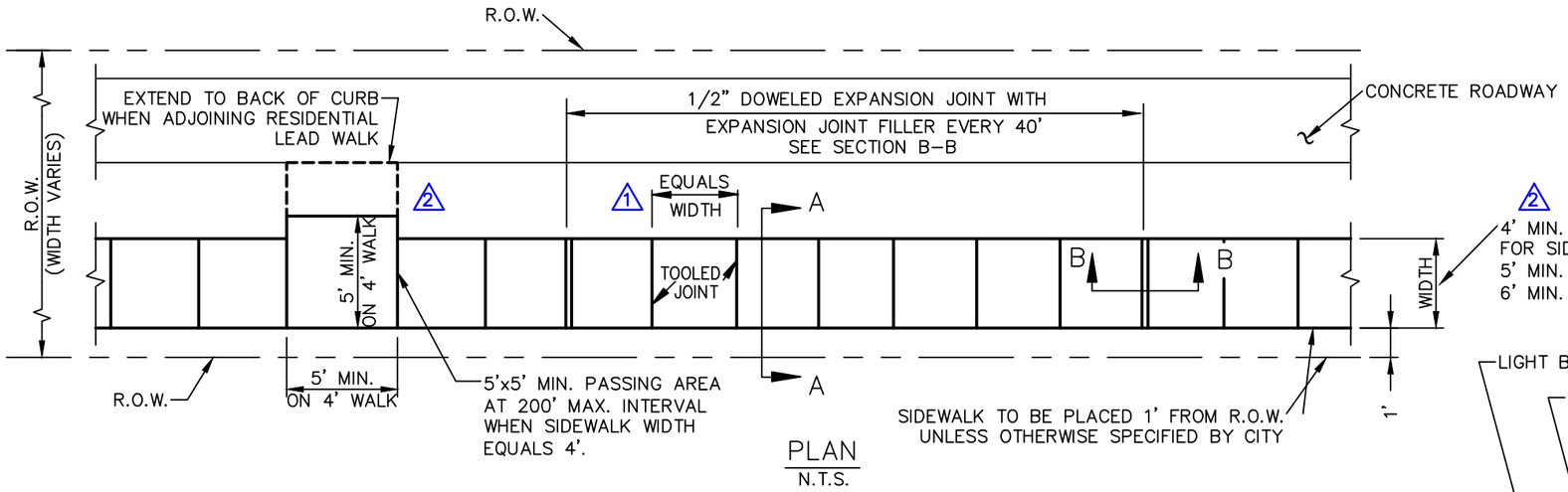

PLAN
N.T.S.

4' MIN. W/ 5'x5' PASSING AREA AT 200' MAX. INTERVAL FOR SIDEWALK IN RESIDENTIAL AREA
5' MIN. FOR SIDEWALK ALONG DIVIDED THOROUGHFARE
6' MIN. FOR SIDEWALK ADJACENT TO CURB OF ROADWAY

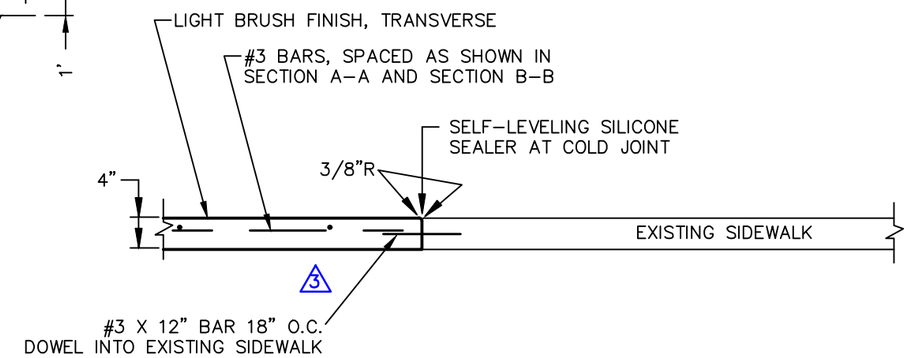

SIDEWALK REPAIR
N.T.S.

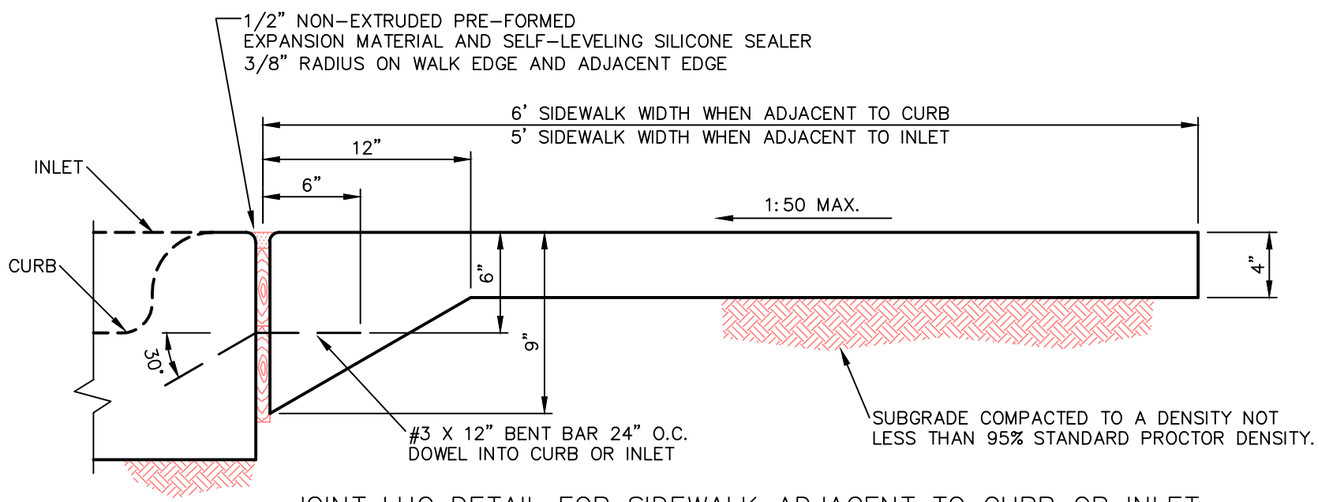

JOINT LUG DETAIL FOR SIDEWALK ADJACENT TO CURB OR INLET
N.T.S.

NOTE:

1. WIRE MESH REINFORCEMENT IS NOT PERMITTED.
2. CROSS SLOPE OF SIDEWALK SHALL BE 1:50 MAX.
3. SIDEWALK WIDTH OTHER THAN 4'–0" MAY BE SPECIFIED BY CITY.
4. SIDEWALK SHALL BE CLASS "A" CONCRETE UNLESS OTHERWISE SPECIFIED BY CITY.
5. ALL HONEYCOMB IN BACK OF CURB SHALL BE TROWEL–PLASTERED BEFORE POURING SIDEWALK.
6. LUG MAY BE FORMED BY SHAPING SUBGRADE TO APPROXIMATE DIMENSIONS SHOWN.
7. SIDEWALK SURFACE FINISH SHALL BE TRANSVERSE TO DIRECTION OF TRAVEL AND SHALL BE LIGHT BROOM FINISH.
8. WIDTHS AND SLOPES MAY VARY. ALL ACCESSIBLE ROUTES MUST COMPLY WITH A.D.A. AND T.A.S. REGULATIONS.

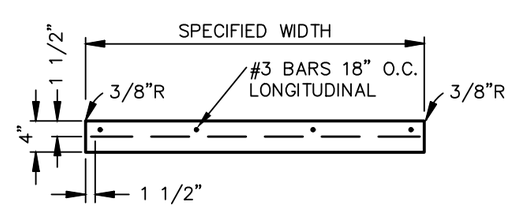

SECTION A–A
N.T.S.

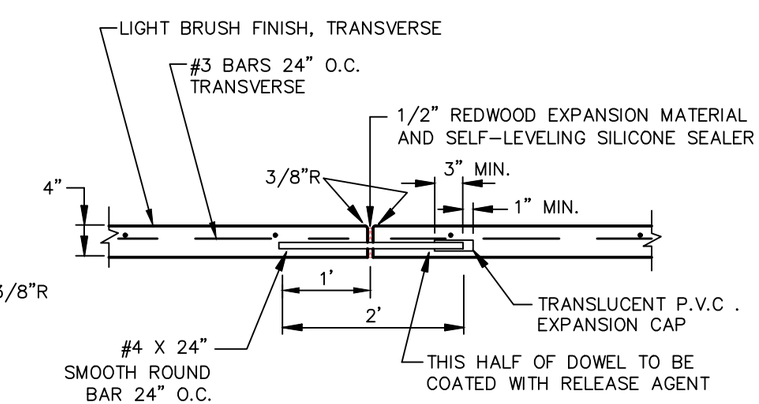

SECTION B–B
N.T.S.

North Central Texas Council of Governments

NOTE: STANDARDS ARE ADOPTED FROM THE NCTOG STANDARD DRAWINGS DATED NOV. '96, WITH LOCAL EXCEPTIONS.

NO.	LOCAL EXCEPTION	BY	DATE
3	REMOVED ADDITIONAL CONCRETE UNDER EXISTING SIDEWALK	SWL	JUL. '14
2	ADDED 5'x5' PASSING AREA FOR 4' SIDEWALK	SWL	JUL. '14
1	CHANGED DIMENSION FROM 4' TO EQUAL SIDEWALK WIDTH	SWL	JUL. '14

THE CITY OF COPPELL TEXAS 1840

STANDARD CONSTRUCTION DETAILS

REINFORCED CONCRETE SIDEWALK JOINTS AND SPACING

CITY OF COPPELL DALLAS COUNTY, TEXAS

STD. SPEC. REFERENCE 305., 401.

STANDARD DETAIL 2170

PATH: S:\Standard_Details\New_Dets_modified\SDCoppell2005.dwg

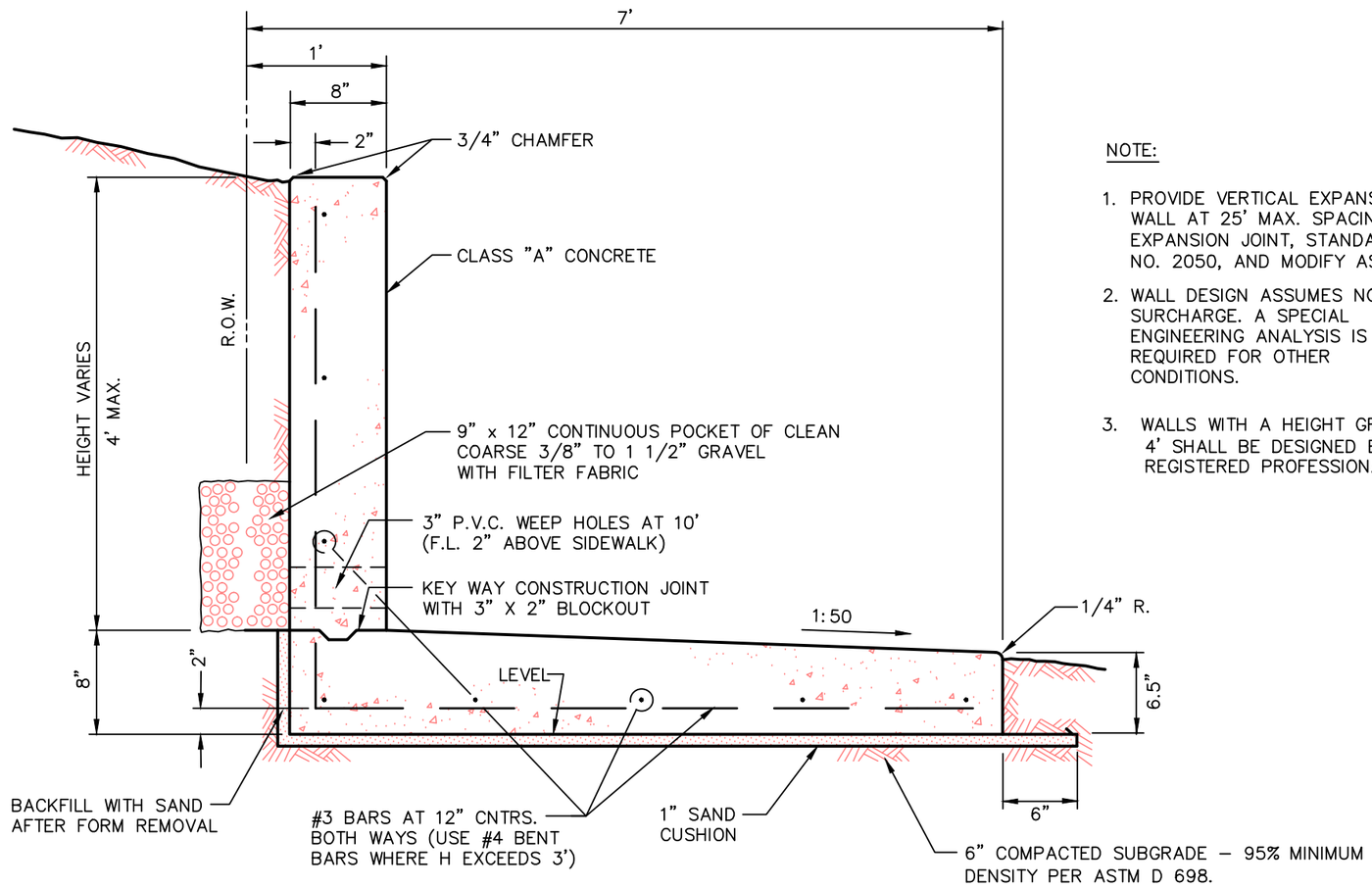

RETAINING WALL WITH INTEGRAL SIDEWALK

N.T.S.

NOTE:

1. PROVIDE VERTICAL EXPANSION IN WALL AT 25' MAX. SPACING (USE EXPANSION JOINT, STANDARD DRAWING NO. 2050, AND MODIFY AS REQUIRED)
2. WALL DESIGN ASSUMES NO SURCHARGE. A SPECIAL ENGINEERING ANALYSIS IS REQUIRED FOR OTHER CONDITIONS.
3. WALLS WITH A HEIGHT GREATER THAN 4' SHALL BE DESIGNED BY A TEXAS REGISTERED PROFESSIONAL ENGINEER.

North Central Texas Council of Governments

NOTE: STANDARDS ARE ADOPTED FROM THE NCTOG STANDARD DRAWINGS DATED NOV. '96, WITH LOCAL EXCEPTIONS.

NO.	LOCAL EXCEPTION	BY	DATE

THE CITY OF COPPELL TEXAS 1890

STANDARD CONSTRUCTION DETAILS

REINFORCED CONCRETE RETAINING WALL INTEGRAL WITH SIDEWALK

CITY OF COPPELL DALLAS COUNTY, TEXAS

STD. SPEC. REFERENCE 303., 802.

STANDARD DETAIL 2180

PATH: S:\Standard_Details\New_Dets_modified\SDCoppell2005.dwg

NOTES:

1. ALL DIMENSIONS TO BACK OF CURB AND IN FEET UNLESS OTHERWISE SHOWN
2. STAMPED, COLORED CONCRETE CROSSWALK PAVING SHALL BE USED IN CONSTRUCTION LOCATIONS DESIGNATED AS "IMAGE ZONES" BY THE STREETSCAPE PLAN SECTION OF THE CITY OF COPPELL SUBDIVISION ORDINANCE AND CONSTRUCTED IN ACCORDANCE WITH THE CITY OF COPPELL STAMPED CONCRETE ORDINANCE 2002-979. STANDARD CONCRETE PEDESTRIAN ACCESSIBLE ROUTES AND LANDINGS SHALL BE CONSTRUCTED IDENTICAL TO SIDEWALKS. SEE STANDARD CONSTRUCTION DETAIL 2170.
3. CONCRETE PAVER UNITS WITH A TRUNCATED DOME SURFACE FINISH SHALL BE USED IN THE RAMP DETECTABLE WARNING AREA. PAVER UNITS MUST MEET ALL REQUIREMENTS OF ASTM C-936 AND C-33 AND BE "ANTIQUE RED" IN COLOR. TRUNCATED DOME PROFILE AND SPACING SHALL BE IN ACCORDANCE WITH THE TEXAS ACCESSIBILITY STANDARDS (T.A.S.) REGULATIONS. SEE STANDARD CONSTRUCTION DETAIL 2185-2. (3)
4. ARMOR TILE TRUNCATED DOME MATERIAL MAY BE USED IN PEDESTRIAN RAMP CONSTRUCTION WHEN APPROVED BY THE CITY ENGINEER. SEE STANDARD CONSTRUCTION DETAIL 2185-2.
5. WIDTHS AND SLOPES MAY VARY. MAXIMUM ALLOWABLE CROSS SLOPE ON ALL ACCESSIBLE ROUTES SHALL BE 1:50. ALL ACCESSIBLE ROUTES AND RAMPS MUST COMPLY WITH A.D.A. AND T.A.S. REGULATIONS.
6. CURB HEIGHT AND WIDTH SHALL BE 6", OR AS SPECIFIED BY CITY. SEE STANDARD CONSTRUCTION DETAIL 2120.
7. ALL DIMENSIONS, SLOPE VALUES AND SURFACE TREATMENTS ARE TYPICAL FOR ALL SIMILAR FEATURES.
8. PEDESTRIAN RAMPS SHOWN ARE OF THE "DIRECTIONAL" TYPE.

-GENERAL GUIDELINE ONLY-

ALL ACCESSIBLE ROUTES AND TRAFFIC SIGNAL COMPONENTS MUST COMPLY WITH A.D.A., T.A.S. AND T.M.U.T.C.D. REGULATIONS.

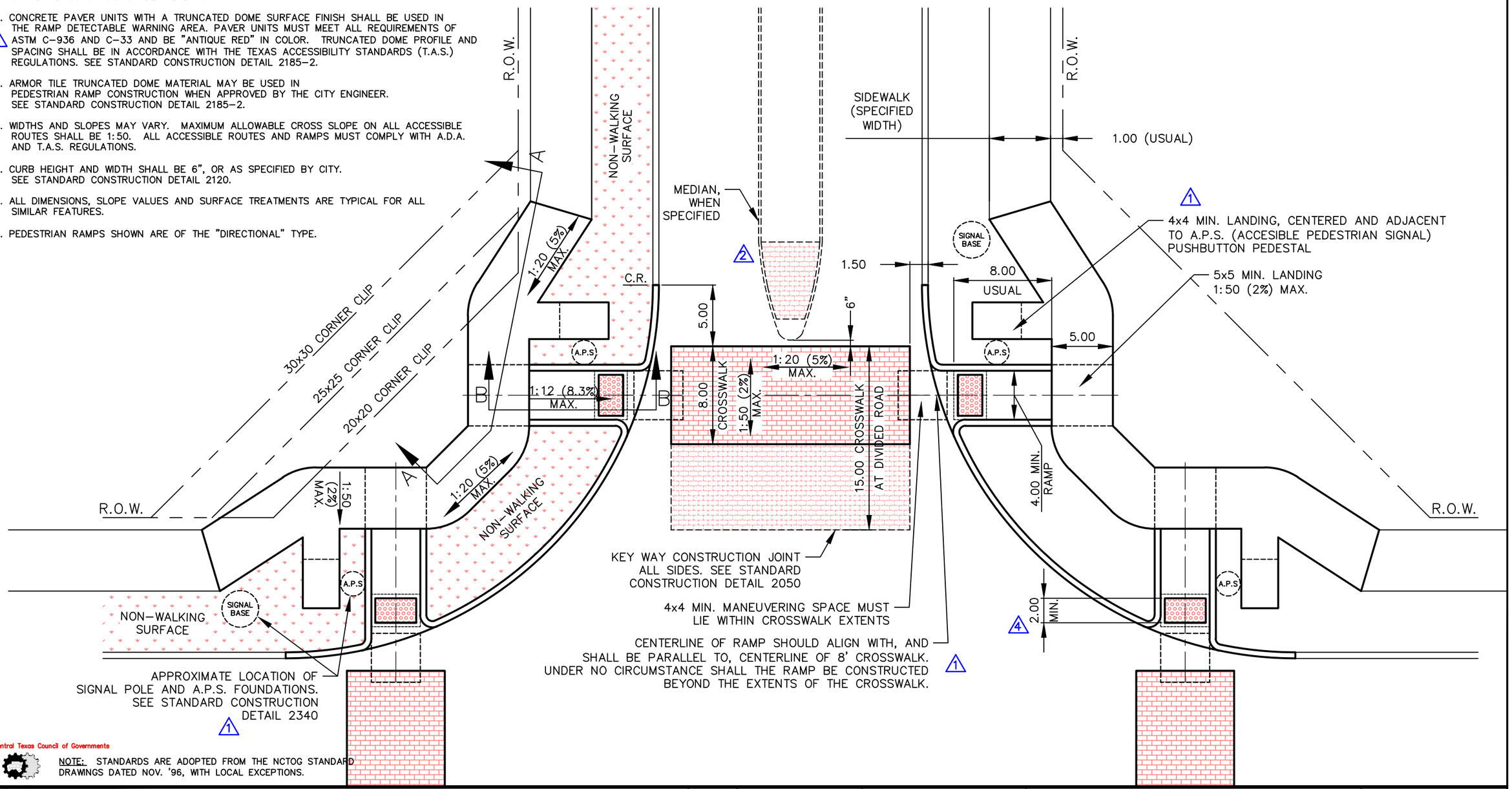

North Central Texas Council of Governments

NOTE: STANDARDS ARE ADOPTED FROM THE NCTOG STANDARD DRAWINGS DATED NOV. '96, WITH LOCAL EXCEPTIONS.

NO.	LOCAL EXCEPTION	BY	DATE
4	REDUCE TRUNCATED DOME SECTION FROM FULL LENGTH TO 2.0' MIN.	SWL	JUL. '14
3	CHANGED REQUIRED RAMP TRUNCATED DOME MATERIAL FROM STAMPED CONCRETE TO BRICK PAVER UNITS	SWL	JUL. '14
2	ADDED MEDIAN	SWL	JUL. '14
1	REVISED LAYOUT OF RAMPS. ADDED LANDING ADJACENT TO A.P.S. PUSH-BUTTON	SWL	JUL. '14

THE CITY OF COPPELL TEXAS 1840

STANDARD CONSTRUCTION DETAILS

ACCESSIBLE ROUTES, RAMPS AND CROSSWALKS COLLECTOR STREETS AND THOROUGHFARES

CITY OF COPPELL DALLAS COUNTY, TEXAS

STD. SPEC. REFERENCE 305.

STANDARD DETAIL 2185-1

PATH: S:\Standard_Details\New_Dets_modified\SDCoppell2005.dwg

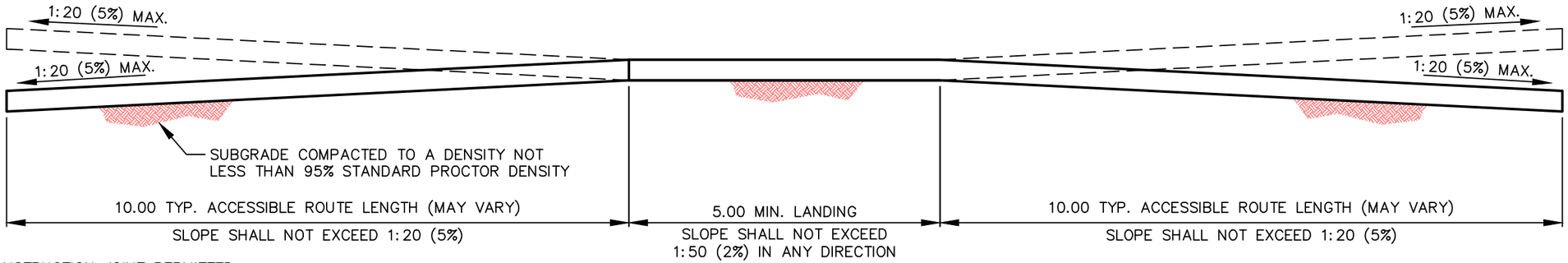

SECTION A–A

N.T.S.

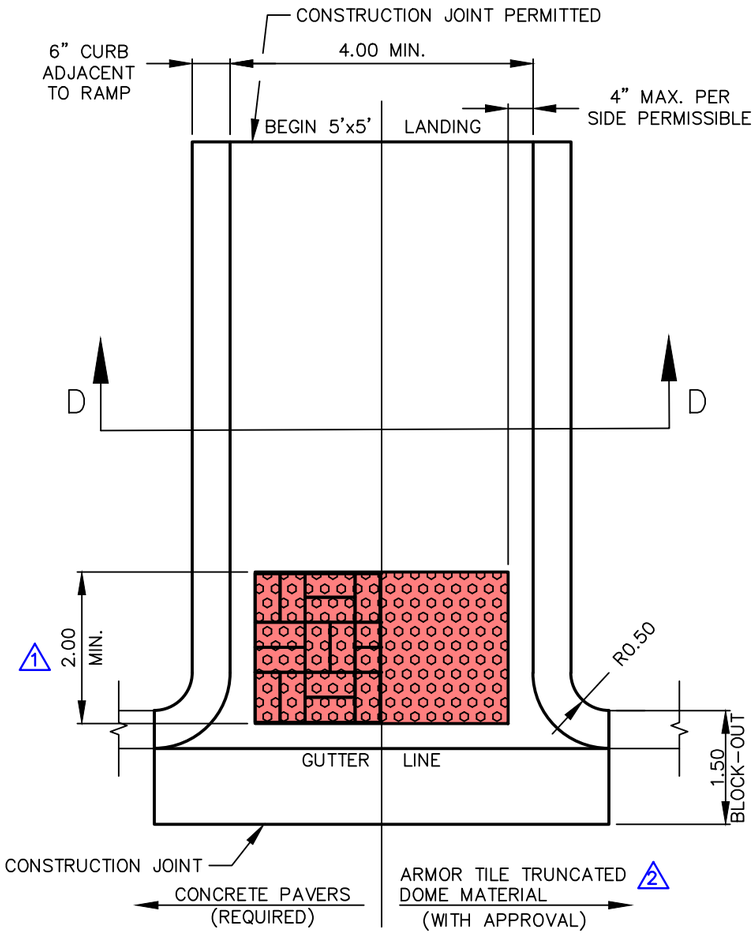

RAMP VIEW C–C

N.T.S.

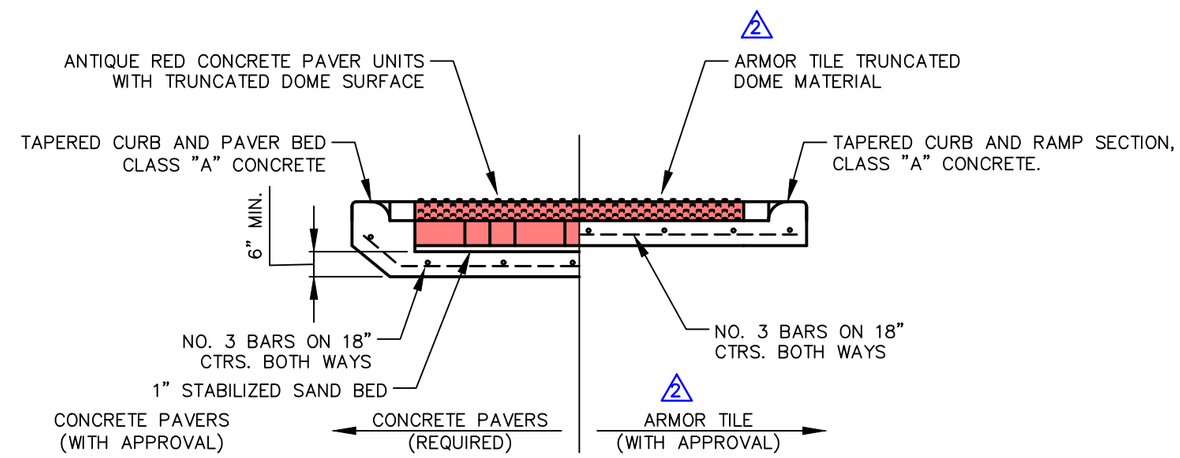

RAMP SECTION D–D

N.T.S.

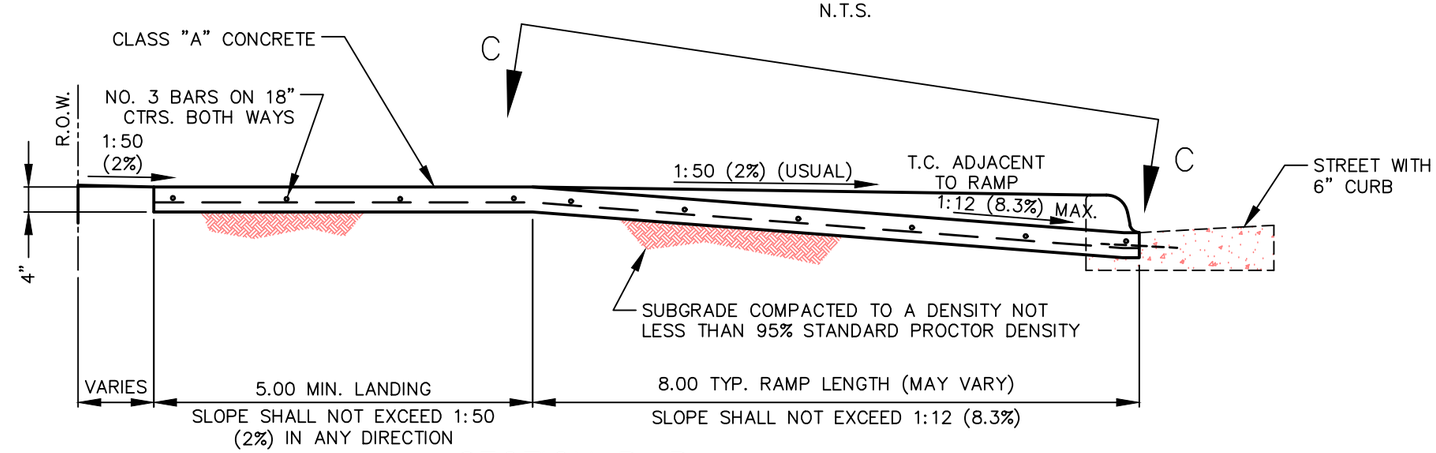

SECTION B–B

N.T.S.

North Central Texas Council of Governments

NOTE: STANDARDS ARE ADOPTED FROM THE NCTOG STANDARD DRAWINGS DATED NOV. '96, WITH LOCAL EXCEPTIONS.

NO.	LOCAL EXCEPTION	BY	DATE
2	CHANGED OPTIONAL TRUNCATED DOME SURFACE FROM STAMPED CONCRETE TO ARMOR TILE.	SWL	JUL. '14
1	REDUCE TRUNCATED DOME SECTION FROM FULL LENGTH TO 2.0' MIN.	SWL	JUL. '14

THE CITY OF COPPELL TEXAS 1890

STANDARD CONSTRUCTION DETAILS

ACCESSIBLE ROUTES, RAMPS AND CROSSWALKS COLLECTOR STREETS AND THOROUGHFARES

CITY OF COPPELL DALLAS COUNTY, TEXAS

STD. SPEC. REFERENCE 305.

STANDARD DETAIL 2185-2

PATH: S:\Standard_Details\New_Dets_modified\SDCoppell2005.dwg

NOTES:

1. ALL DIMENSIONS TO BACK OF CURB AND IN FEET UNLESS OTHERWISE SHOWN
2. STAMPED, COLORED CONCRETE CROSSWALK PAVING SHALL BE USED IN CONSTRUCTION LOCATIONS DESIGNATED AS "IMAGE ZONES" BY THE STREETSCAPE PLAN SECTION OF THE CITY OF COPPELL SUBDIVISION ORDINANCE AND CONSTRUCTED IN ACCORDANCE WITH THE CITY OF COPPELL STAMPED CONCRETE ORDINANCE 2002-979. STANDARD CONCRETE PEDESTRIAN ACCESSIBLE ROUTES AND LANDINGS SHALL BE CONSTRUCTED IDENTICAL TO SIDEWALKS. SEE STANDARD CONSTRUCTION DETAIL 2170.
3. CONCRETE PAVER UNITS WITH A TRUNCATED DOME SURFACE FINISH SHALL BE USED IN THE RAMP DETECTABLE WARNING AREA. PAVER UNITS MUST MEET ALL REQUIREMENTS OF ASTM C-936 AND C-33 AND BE "ANTIQUE RED" IN COLOR. TRUNCATED DOME PROFILE AND SPACING SHALL BE IN ACCORDANCE WITH THE TEXAS ACCESSIBILITY STANDARDS (T.A.S.) REGULATIONS. SEE STANDARD CONSTRUCTION DETAIL 2185-4. (1)
4. ARMOR TILE TRUNCATED DOME MATERIAL MAY BE USED IN PEDESTRIAN RAMP CONSTRUCTION WHEN APPROVED BY THE CITY ENGINEER. SEE STANDARD CONSTRUCTION DETAIL 2185-4.
5. WIDTHS AND SLOPES MAY VARY. MAXIMUM ALLOWABLE CROSS SLOPE ON ALL ACCESSIBLE ROUTES SHALL BE 1:50. ALL ACCESSIBLE ROUTES AND RAMPS MUST COMPLY WITH A.D.A. AND T.A.S. REGULATIONS.
6. CURB HEIGHT AND WIDTH SHALL BE 6", OR AS SPECIFIED BY CITY. SEE STANDARD CONSTRUCTION DETAIL 2120.
7. ALL DIMENSIONS, SLOPE VALUES AND SURFACE TREATMENTS ARE TYPICAL FOR ALL SIMILAR FEATURES.
8. PEDESTRIAN RAMPS SHOWN ARE OF THE "DIAGONAL COMBINATION" TYPE.
9. RAMPS WITH A RISE GREATER THAN 6" OR A RUN GREATER THAN 72" SHALL HAVE HANDRAILS. NOT APPLICABLE TO CURB RAMPS.

-GENERAL GUIDELINE ONLY-

ALL ACCESSIBLE ROUTES AND RAMPS MUST COMPLY WITH A.D.A. AND T.A.S. REGULATIONS.

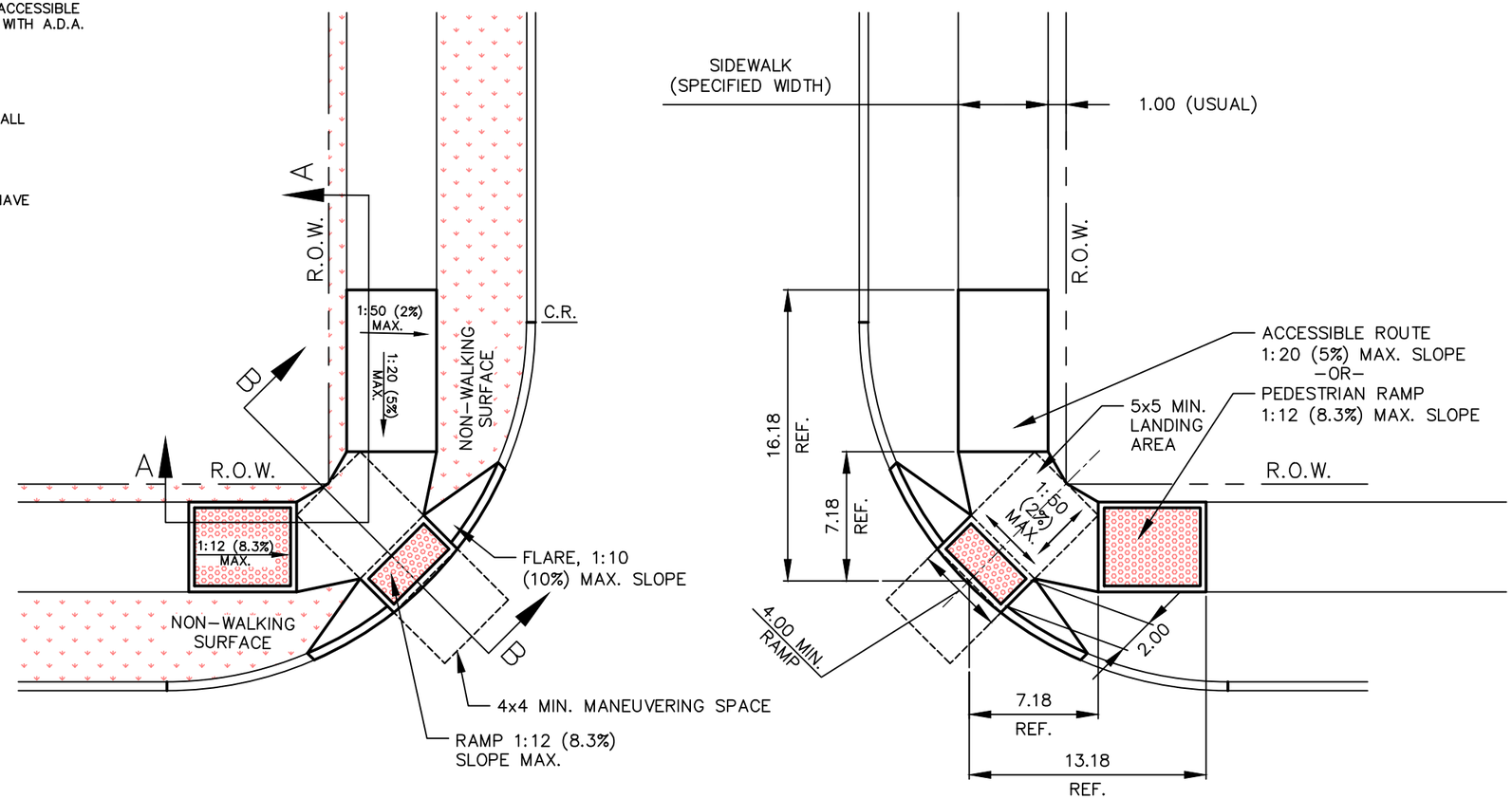

North Central Texas Council of Governments

NOTE: STANDARDS ARE ADOPTED FROM THE NCTOG STANDARD DRAWINGS DATED NOV. '96, WITH LOCAL EXCEPTIONS.

NO.	LOCAL EXCEPTION	BY	DATE
1	CHANGED REQUIRED RAMP TRUNCATED DOME MATERIAL FROM STAMPED CONCRETE TO BRICK PAVER UNITS	SWL	JUL. '14

THE CITY OF COPPELL TEXAS 1890

STANDARD CONSTRUCTION DETAILS

ACCESSIBLE ROUTES, RAMPS AND CROSSWALKS
RESIDENTIAL STREET W/O R.O.W. CORNER CLIPS

CITY OF COPPELL DALLAS COUNTY, TEXAS

STD. SPEC. REFERENCE 305.

STANDARD DETAIL 2185-3

PATH: S:\Standard_Details\New_Dets_modified\SDCoppell2005.dwg

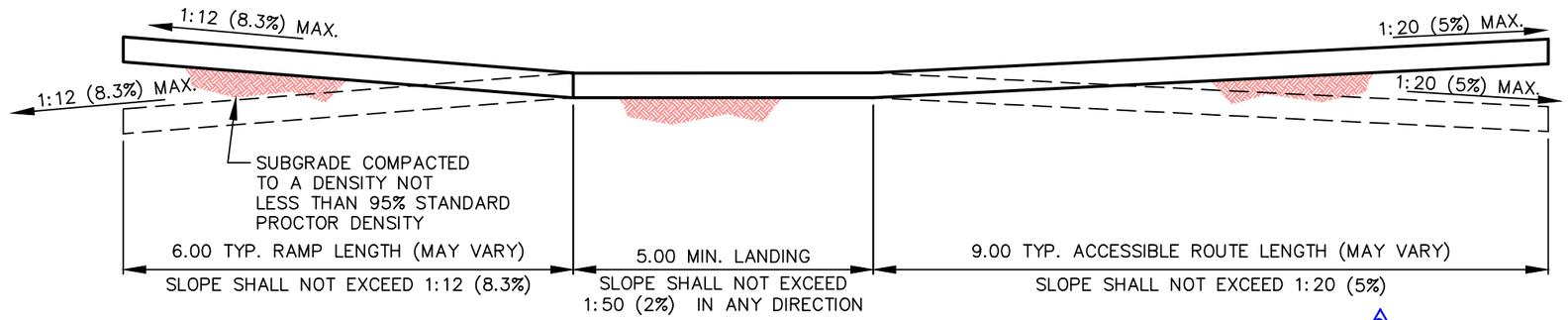

SECTION A–A

N.T.S.

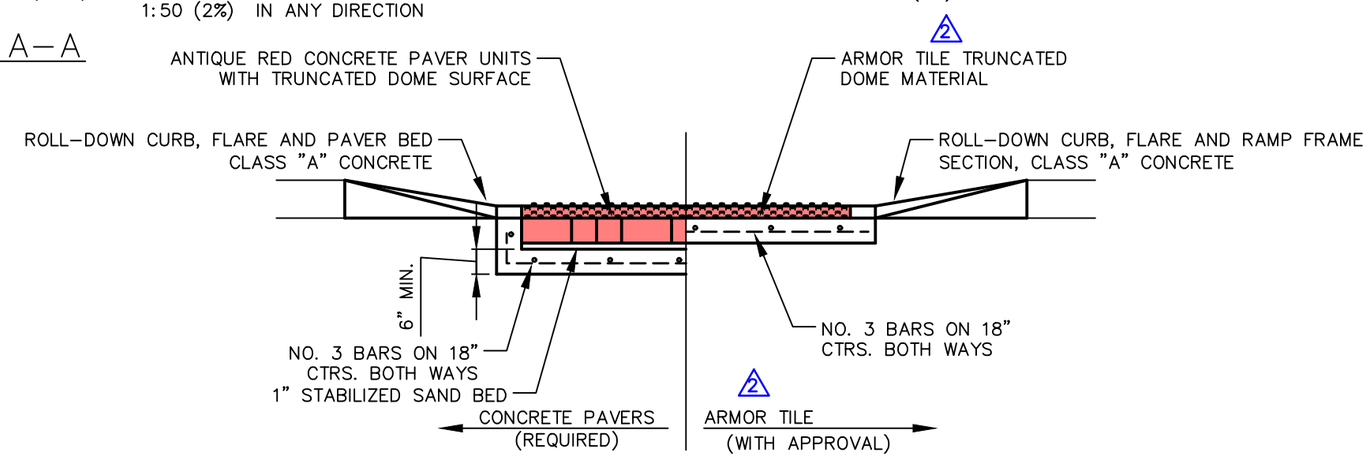

RAMP SECTION D–D

N.T.S.

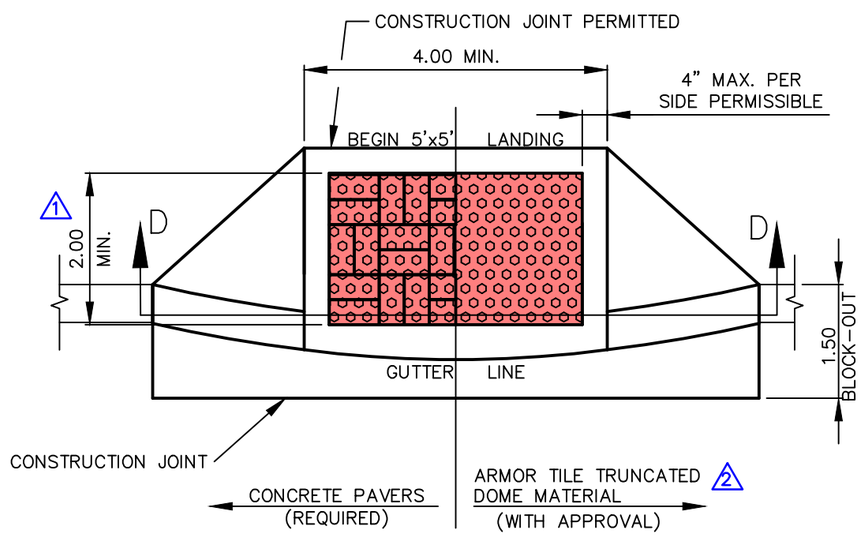

RAMP VIEW C–C

N.T.S.

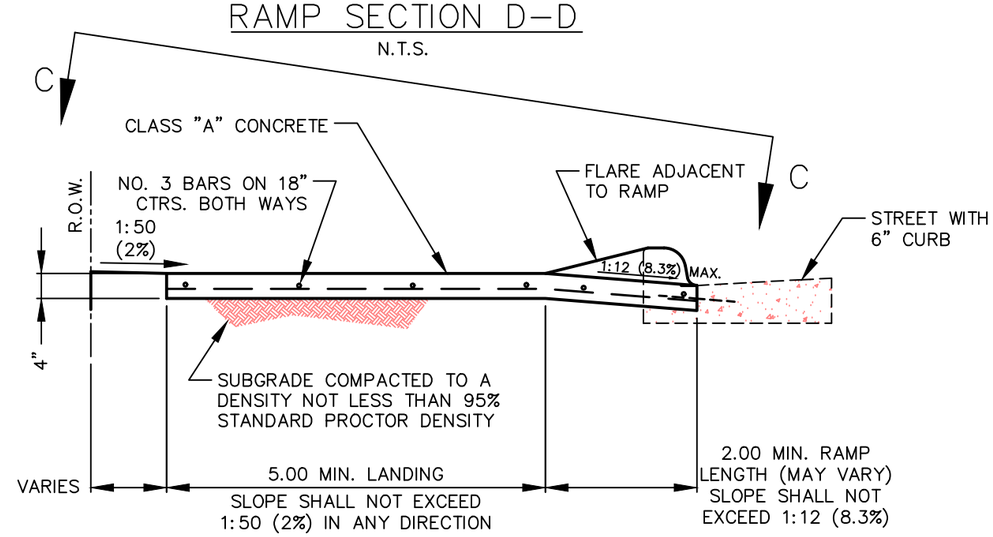

SECTION B–B

N.T.S.

North Central Texas Council of Governments

NOTE: STANDARDS ARE ADOPTED FROM THE NCTOG STANDARD DRAWINGS DATED NOV. '96, WITH LOCAL EXCEPTIONS.

NO.	LOCAL EXCEPTION	BY	DATE
2	CHANGED OPTIONAL TRUNCATED DOME SURFACE FROM STAMPED CONCRETE TO ARMOR TILE.	SWL	JUL. '14
1	REDUCE TRUNCATED DOME SECTION FROM FULL LENGTH TO 2.0' MIN.	SWL	JUL. '14

THE CITY OF COPPELL TEXAS 1890

STANDARD CONSTRUCTION DETAILS

ACCESSIBLE ROUTES, RAMPS AND CROSSWALKS

RESIDENTIAL STREET W/O R.O.W. CORNER CLIPS

CITY OF COPPELL DALLAS COUNTY, TEXAS

STD. SPEC. REFERENCE 305.

STANDARD DETAIL 2185-4

PATH: S:\Standard_Details\New_Dets_modified\SDCoppell2005.dwg

NOTES:

1. ALL DIMENSIONS TO BACK OF CURB AND IN FEET UNLESS OTHERWISE SHOWN
2. STAMPED, COLORED CONCRETE CROSSWALK PAVING SHALL BE USED IN CONSTRUCTION LOCATIONS DESIGNATED AS "IMAGE ZONES" BY THE STREETSCAPE PLAN SECTION OF THE CITY OF COPPELL SUBDIVISION ORDINANCE AND CONSTRUCTED IN ACCORDANCE WITH THE CITY OF COPPELL STAMPED CONCRETE ORDINANCE 2002–979. STANDARD CONCRETE PEDESTRIAN ACCESSIBLE ROUTES AND LANDINGS SHALL BE CONSTRUCTED IDENTICAL TO SIDEWALKS. SEE STANDARD CONSTRUCTION DETAIL 2170.
3. CONCRETE PAVER UNITS WITH A TRUNCATED DOME SURFACE FINISH SHALL BE USED IN THE RAMP DETECTABLE WARNING AREA. PAVER UNITS MUST MEET ALL REQUIREMENTS OF ASTM C–936 AND C–33 AND BE "ANTIQUE RED" IN COLOR. TRUNCATED DOME PROFILE AND SPACING SHALL BE IN ACCORDANCE WITH THE TEXAS ACCESSIBILITY STANDARDS (T.A.S.) REGULATIONS. SEE STANDARD CONSTRUCTION DETAIL 2185–6. (2)
4. ARMOR TILE TRUNCATED DOME MATERIAL MAY BE USED IN PEDESTRIAN RAMP CONSTRUCTION WHEN APPROVED BY THE CITY ENGINEER. SEE STANDARD CONSTRUCTION DETAIL 2185–6.
5. WIDTHS AND SLOPES MAY VARY. MAXIMUM ALLOWABLE CROSS SLOPE ON ALL ACCESSIBLE ROUTES SHALL BE 1:50. ALL ACCESSIBLE ROUTES AND RAMPS MUST COMPLY WITH A.D.A. AND T.A.S. REGULATIONS.
6. CURB HEIGHT AND WIDTH SHALL BE 6", OR AS SPECIFIED BY CITY. SEE STANDARD CONSTRUCTION DETAIL 2120.
7. ALL DIMENSIONS, SLOPE VALUES AND SURFACE TREATMENTS ARE TYPICAL FOR ALL SIMILAR FEATURES.
8. PEDESTRIAN RAMPS SHOWN ARE OF THE "DIAGONAL COMBINATION" TYPE.

–GENERAL GUIDELINE ONLY–
ALL ACCESSIBLE ROUTES AND RAMPS MUST COMPLY WITH A.D.A. AND T.A.S. REGULATIONS.

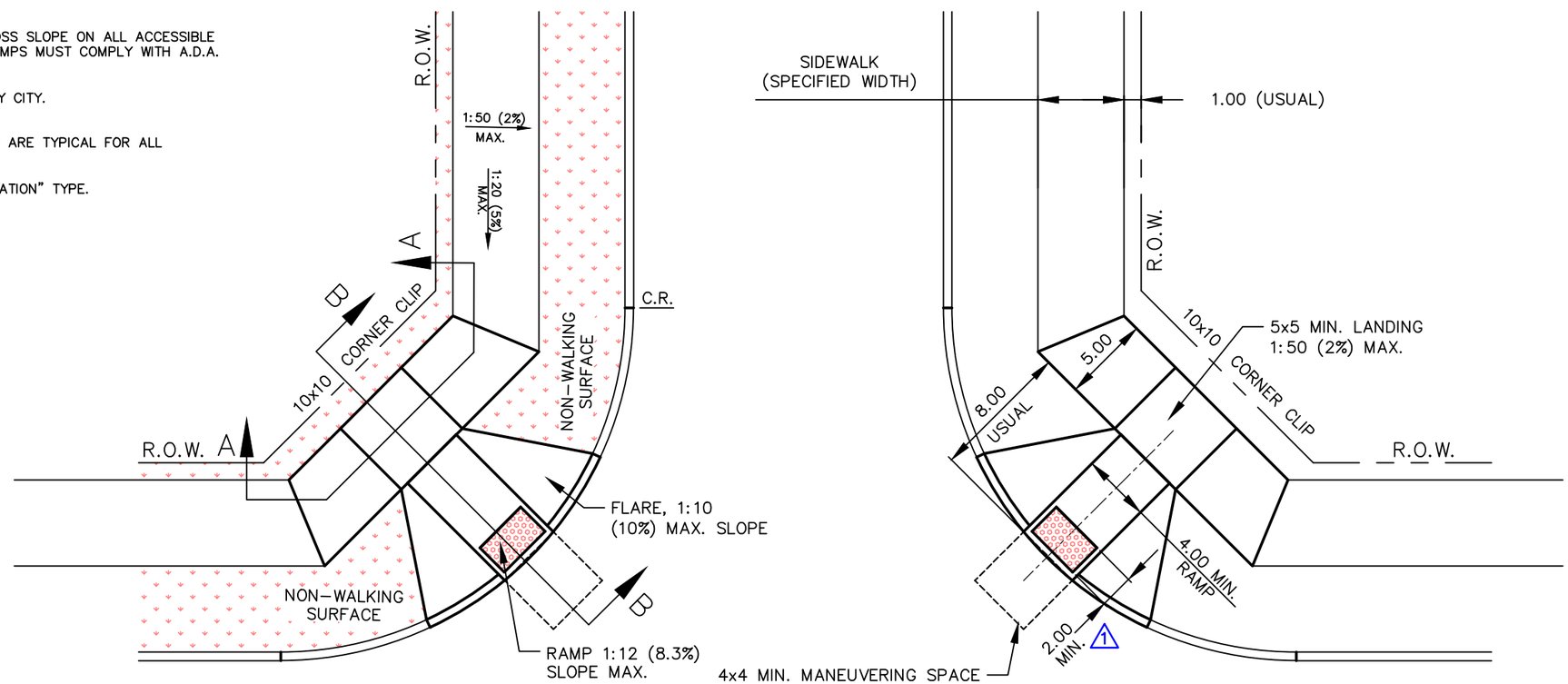

North Central Texas Council of Governments

NOTE: STANDARDS ARE ADOPTED FROM THE NCTOG STANDARD DRAWINGS DATED NOV. '96, WITH LOCAL EXCEPTIONS.

NO.	LOCAL EXCEPTION	BY	DATE
2	CHANGED REQUIRED RAMP TRUNCATED DOME MATERIAL FROM STAMPED CONCRETE TO BRICK PAVER UNITS	SWL	JUL. '14
1	REDUCE TRUNCATED DOME SECTION FROM FULL LENGTH TO 2.0' MIN.	SWL	JUL. '14

THE CITY OF COPPELL TEXAS 1890

STANDARD CONSTRUCTION DETAILS

ACCESSIBLE ROUTES, RAMPS AND CROSSWALKS
RESIDENTIAL STREET W/ R.O.W. CORNER CLIPS

CITY OF COPPELL DALLAS COUNTY, TEXAS

STD. SPEC. REFERENCE 305.

STANDARD DETAIL 2185-5

PATH: S:\Standard_Details\New_Dets_modified\SDCoppell2005.dwg

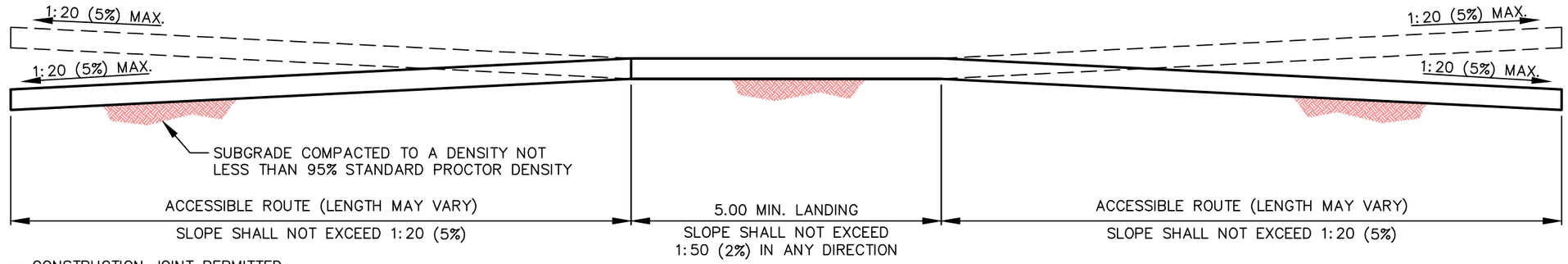

SECTION A–A

N.T.S.

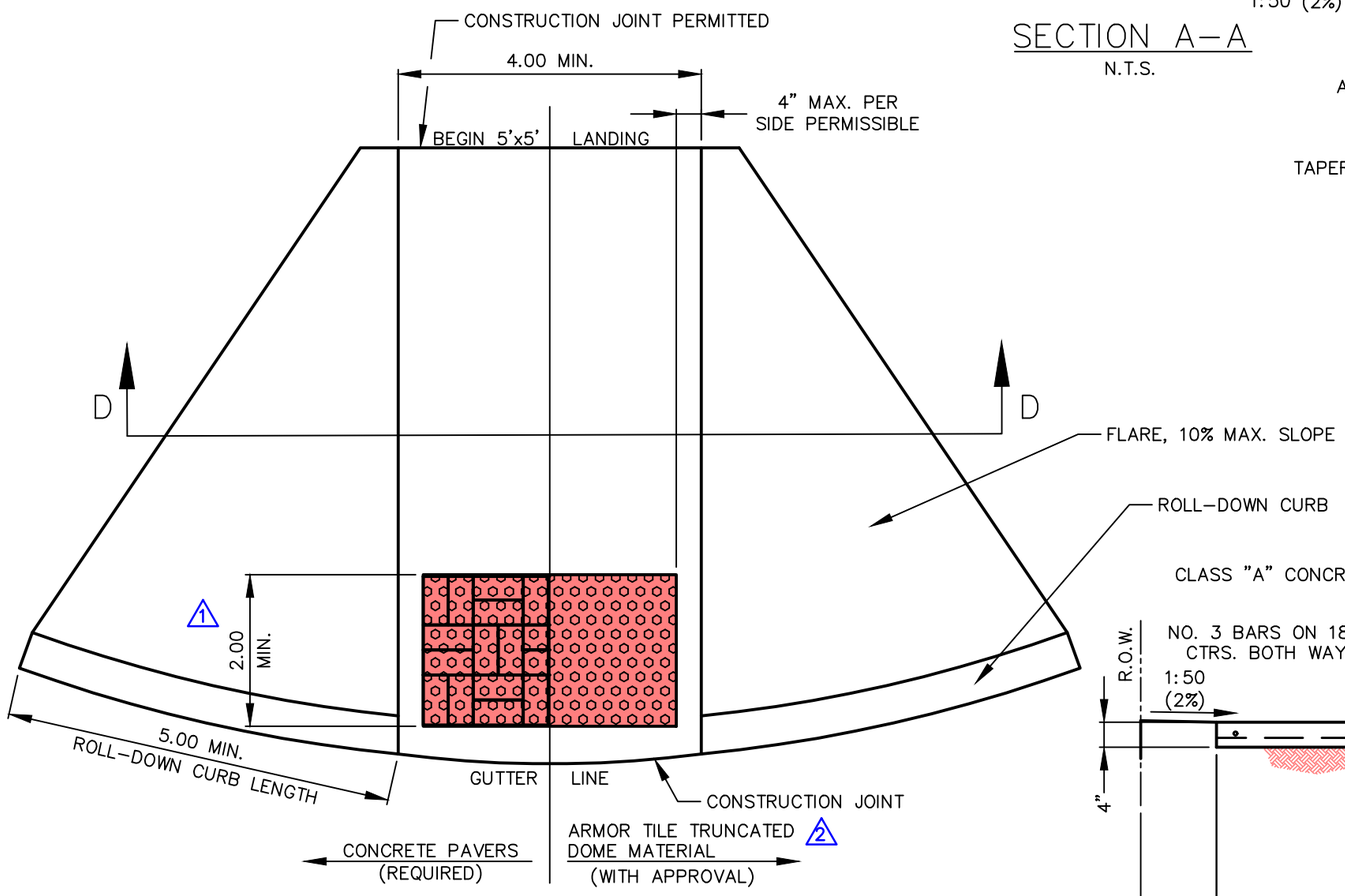

RAMP VIEW C–C

N.T.S.

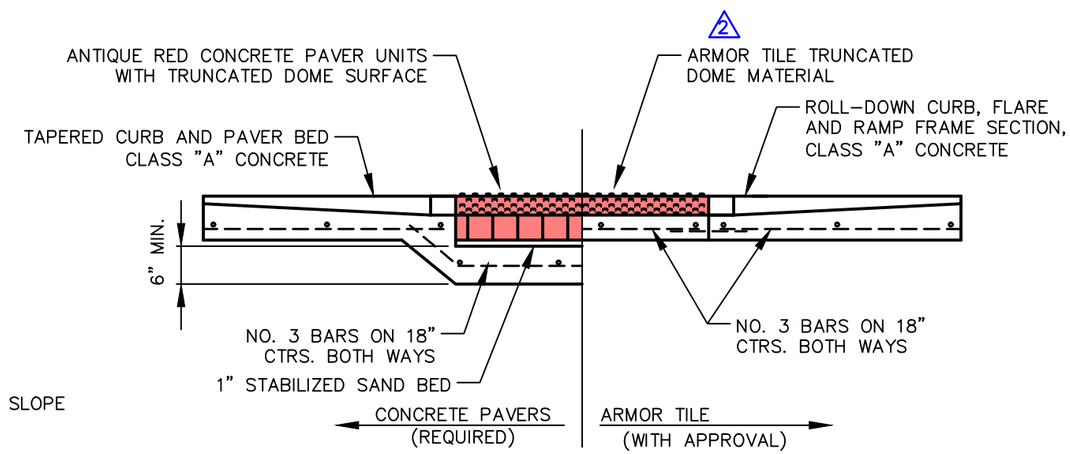

RAMP SECTION D–D

N.T.S.

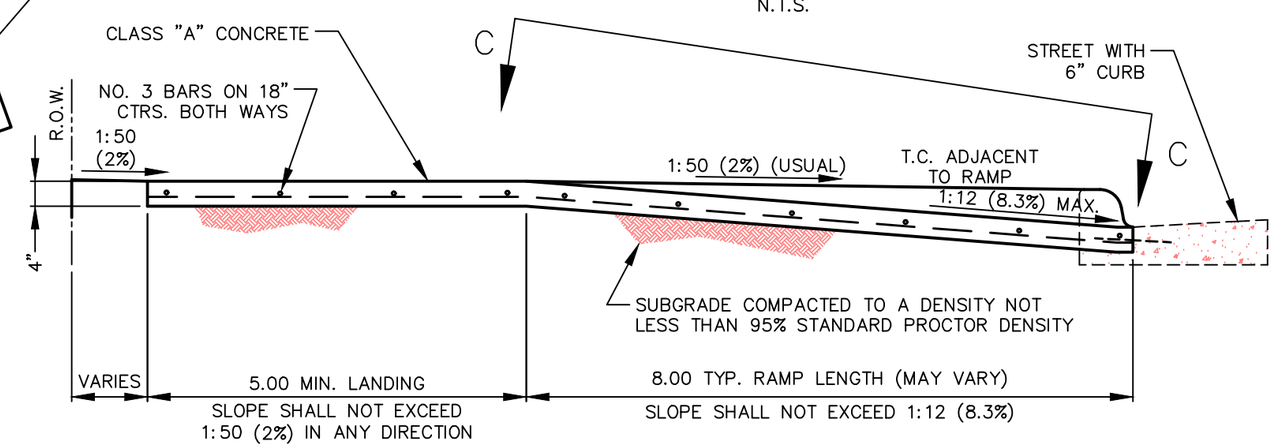

SECTION B–B

N.T.S.

North Central Texas Council of Governments

NOTE: STANDARDS ARE ADOPTED FROM THE NCTOG STANDARD DRAWINGS DATED NOV. '96, WITH LOCAL EXCEPTIONS.

NO.	LOCAL EXCEPTION	BY	DATE
2	CHANGED OPTIONAL TRUNCATED DOME SURFACE FROM STAMPED CONCRETE TO ARMOR TILE.	SWL	JUL. '14
1	REDUCE TRUNCATED DOME SECTION FROM FULL LENGTH TO 2.0' MIN.	SWL	JUL. '14

THE CITY OF COPPELL TEXAS 1890

STANDARD CONSTRUCTION DETAILS

ACCESSIBLE ROUTES, RAMPS AND CROSSWALKS
RESIDENTIAL STREET W/ R.O.W. CORNER CLIPS

CITY OF COPPELL DALLAS COUNTY, TEXAS

STD. SPEC. REFERENCE
305.

STANDARD DETAIL
2185-6

PATH: S:\Standard_Details\New_Dets_modified\SDCoppell2005.dwg

NOTES:

1. MIN. DECORATIVE PAVEMENT DEPTH SHALL BE 6". PAVEMENT STRENGTH, TYPE AND COLOR SHALL CONFORM TO THE CITY OF COPPELL STAMPED CONCRETE ORDINANCE 2002–979.
2. STAMPED, COLORED CONCRETE PAVING SHALL BE USED IN CONSTRUCTION LOCATIONS DESIGNATED AS "IMAGE ZONES" BY THE STREETSCAPE PLAN SECTION OF THE CITY OF COPPELL SUBDIVISION ORDINANCE AND THE CITY OF COPPELL STAMPED CONCRETE ORDINANCE 2002–979.
3. SUBGRADE (MIN. REQUIREMENTS–UNLESS OTHERWISE APPROVED BY CITY ENGINEER). SUBGRADE UNDER ALL PAVEMENT SHALL BE INITIALLY MIXED 8" THICK AND RE–MIXED 6" THICK AND SHALL BE STABILIZED WITH 6% MIN. BY WEIGHT OF HYDRATED LIME (GENERALLY ±40 LBS./S.Y.) AND COMPACTED TO A DENSITY NOT LESS THAN 95% STANDARD PROCTOR DENSITY. ALTERNATIVE SUBGRADES, SUPPORTED BY LABORATORY TESTS, MAY BE SUBMITTED TO THE CITY ENGINEER FOR APPROVAL.
4. ALL DIMENSIONS TO BACK OF CURB AND IN FEET UNLESS OTHERWISE SHOWN.
5. THE 1" SAND LAYER SHALL CONSIST OF WELL GRADED CLEAN, SHARP SAND WITH 100% PASSING A 3/8" SIEVE SIZE AND A MAXIMUM OF 3% PASSING A NO. 200 SIEVE SIZE. THIS SAND IS MORE COMMONLY KNOWN AS MANUFACTURED CONCRETE SAND, LIMESTONE SCREENING OR SIMILAR. MASON SAND IS NOT PERMITTED.
6. THE CONSTRUCTION OF THE SAND LAYER AND THE LAYING OF THE CONCRETE PAVERS SHALL BE IN ACCORDANCE WITH THE MANUFACTURERS INSTALLATION INSTRUCTIONS.
7. IF STAMPED CONCRETE/PAVER BAND IS TO BE UTILIZED AS AN ACCESSIBLE ROUTE ACROSS THE PROPOSED DRIVEWAY, THE MAXIMUM ALLOWABLE CROSS SLOPE SHALL BE 1:50. ALL ACCESSIBLE ROUTES AND RAMPS MUST COMPLY TO A.D.A AND T.A.S. REGULATIONS.

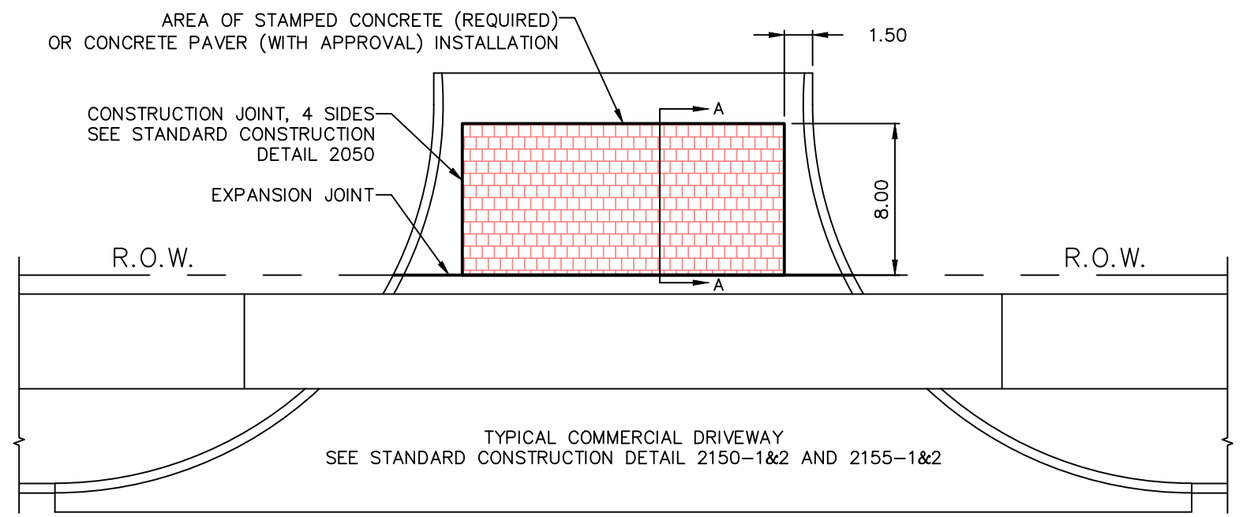

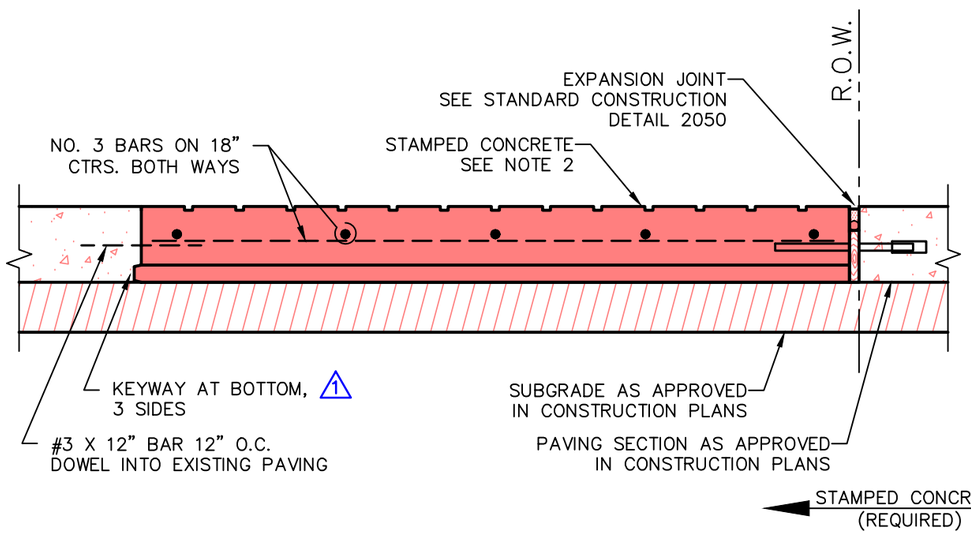

SECTION A–A

N.T.S.

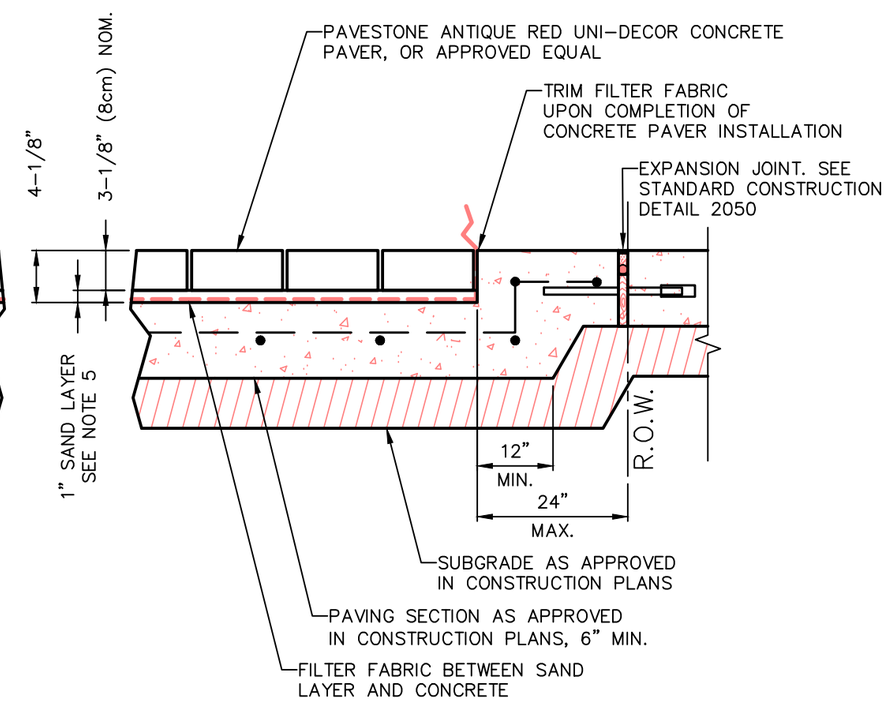

North Central Texas Council of Governments

NOTE: STANDARDS ARE ADOPTED FROM THE NCTOG STANDARD DRAWINGS DATED NOV. '96, WITH LOCAL EXCEPTIONS.

NO.	LOCAL EXCEPTION	BY	DATE
2	ADD "ON PRIVATE PROPERTY" TO NOTE.	SWL	JUL. '14
1	ADD KEYWAY TO BOTTOM, 3 SIDES.	SWL	JUL. '14

THE CITY OF COPPELL TEXAS 1890

STANDARD CONSTRUCTION DETAILS

COMMERCIAL DRIVEWAY DECORATIVE PAVING
STAMPED CONCRETE / CONCRETE PAVERS

CITY OF COPPELL DALLAS COUNTY, TEXAS

STD. SPEC. REFERENCE
301., 303., 305.

STANDARD DETAIL
2190

PATH: S:\Standard_Details\New_Dets_modified\SDCoppell2005.dwg

CONCRETE PAVING GENERAL NOTES:

1. REINFORCED CONCRETE PAVEMENT:
   A. ALL CURBS SHALL BE PLACED INTEGRAL WITH PAVEMENT UNLESS OTHERWISE APPROVED BY THE CITY.

   B. CURBS SHALL MEET THE SAME COMPRESSIVE STRENGTH AS SPECIFIED FOR THE PAVEMENT.

   C. BAR LAPS SHALL BE 30 DIAMETERS.

   D. REINFORCING BARS SHALL BE SUPPORTED BY CHAIRS OR OTHER DEVICES APPROVED BY THE CITY.

2. IF THE ROADWAY IS A DESIGNATED BIKE ROUTE OR BIKE USAGE IS ANTICIPATED, REFER TO NCTCOG'S "REGIONAL BICYCLE AND PEDESTRIAN FACILITIES DESIGN MANUAL".

3. SUBGRADE (MIN. REQUIREMENTS–UNLESS OTHERWISE APPROVED BY CITY ENGINEER). SUBGRADE UNDER ALL PAVEMENT SHALL BE INITIALLY MIXED 8" THICK AND RE–MIXED 6" THICK AND SHALL BE STABILIZED WITH 6% MIN. BY WEIGHT OF HYDRATED LIME (GENERALLY ±40 LBS./S.Y.) AND COMPACTED TO A DENSITY NOT LESS THAN 95% STANDARD PROCTOR DENSITY. ALTERNATIVE SUBGRADES, SUPPORTED BY LABORATORY TESTS, MAY BE SUBMITTED TO THE CITY ENGINEER FOR APPROVAL.

CONCRETE BRICK PAVER GENERAL NOTES:

1. IN AREAS WHERE CONCRETE PAVERS ARE ALLOWED I.E., DECORATIVE BANDS ON PRIVATE PROPERTY AT ENTRANCES TO COMMERCIAL SHOPPING CENTERS AND INDUSTRIAL PARKS, THE CITY STANDARD PAVER IS PAVESTONE "UNI–DECOR" INTERLOCKING OR APPROVED EQUAL. THE PAVER IS APPROXIMATELY 3 1/8" THICK, PIGMENTED AND THE FOLLOWING COLOR APPLICATION SHALL BE FOLLOWED: ANTIQUE RED SHALL BE THE STANDARD COLOR, LIGHT GRAY SHALL BE USED AS ACCENT BANDING. ACCENT BANDING IS TO BE 4" X 8" RECTANGULAR PAVER, "HOLLAND STONE" OR APPROVED EQUAL. THE SUBBASE SHALL BE REINFORCED CONCRETE PAVING, UNLESS ANOTHER MATERIAL IS APPROVED BY THE CITY ENGINEER. ALTERNATE PAVING MATERIALS AT SUBDIVISION/DEVELOPMENT ENTRY SHALL BE ACCEPTABLE IF THEY ARE COMPARABLE IN COLOR, QUALITY AND TEXTURE TO THE CITY STANDARD.

1

STANDARD CLASSES OF PAVEMENT CONCRETE					
CLASS OF CONCRETE (1)	MINIMUM CEMENTITIOUS LB/CY	28 DAY MIN COMPRESSIVE STRENGTH (2) PSI	28 DAY MIN BEAM STRENGTH (2,3) PSI	MAXIMUM WATER/ CEMENTITIOUS RATIO	COARSE AGGREGATE MAXIMUM SIZE (4)
A (5)	470	3000	500	0.58	1–1/2"
B	376	2000	330	0.71	1–1/2"
C	564	3600	600	0.53	1–1/2"
F	611	4200	700	0.49	1–1/2"
P1 (6),(7)	517	4000	N/A	0.49	1–1/2"
P2 (7)	564	4500	N/A	0.45	1–1/2"
M	AS DIRECTED BY THE OWNER OR AS SHOWN ON THE PLANS				

(1)–ALL EXPOSED HORIZONTAL CONCRETE SHALL HAVE ENTRAINED AIR.
(2)–MINIMUM STRENGTH REQUIRED BY OWNER (COMPRESSIVE OR FLEXURAL).
(3)–ASTM C78 (THIRD–POINT); REDUCE BY 10% WHEN TYPE II CEMENT IS USED.
(4)–SMALLER NOMINAL MAXIMUM SIZE AGGREGATE MAY BE USED IF STRENGTH REQUIREMENT IS SATISFIED.
(5)–SIDEWALKS, SEPARATE CURB AND GUTTER, AND 4" THICK MEDIAN PAVEMENT.
(6)–MACHINE FINISHED.
(7)–HAND FINISHED.

North Central Texas Council of Governments

NOTE: STANDARDS ARE ADOPTED FROM THE NCTOG STANDARD DRAWINGS DATED NOV. '96, WITH LOCAL EXCEPTIONS.

STAMPED, INTEGRALLY COLORED CONCRETE PAVING GENERAL NOTES:

1. STAMPED, INTEGRALLY COLORED CONCRETE PAVING SHALL BE USED IN CONSTRUCTION LOCATIONS DESIGNATED AS "IMAGE ZONES" BY THE STREETSCAPE PLAN SECTION OF THE CITY OF COPPELL SUBDIVISION ORDINANCE AND THE CITY OF COPPELL STAMPED CONCRETE ORDINANCE 2002–979. CONCRETE CONTAINING FLY ASH SHALL NOT BE USED FOR PAVING IN PUBLIC RIGHT OF WAY OR EASEMENTS.

2. CONCRETE STRENGTH SHALL BE A MINIMUM 3600 PSI AT 28 DAYS. STRENGTH SPECIMENS SHALL BE MADE, CURED AND TESTED IN ACCORDANCE WITH TEST METHOD TEX–418–A.

3. INTEGRAL COLOR ADMIXTURE: BOMANITE INTEGRAL COLOR ADMIXTURE, AS MANUFACTURED BY BOMANITE CORPORATION, OR APPROVED EQUAL SHALL BE USED. THE COLOR SHALL BE "RED CLAY".

4. RELEASE AGENT: BOMANITE RELEASE AGENT, AS MANUFACTURED BY BOMANITE CORPORATION, OR APPROVED EQUAL IS TO BE USED. THE COLOR SHALL BE "NATURAL GRAY".

5. STAMPED CONCRETE PATTERN: BOMANITE STAMPED CONCRETE PATTERN, AS MANUFACTURED BY BOMANITE CORPORATION, OR APPROVED EQUAL IS TO BE USED. THE PATTERN SHALL BE "RUNNING BOND USED BRICK".

6. PENETRATING SEALER: SEALER SHALL MEET THE REQUIREMENTS OF ASTM C–309.

7. THE INTEGRAL COLOR ADMIXTURES SHALL BE ADDED TO THE CONCRETE AT THE RATE AND METHOD DETERMINED IN ACCORDANCE WITH THE MANUFACTURER'S RECOMMENDATIONS AND AS APPROVED BY THE ENGINEER. REGARDLESS OF THE METHOD USED, THE CONTRACTOR SHALL MAINTAIN A UNIFORM SHADE OF THE COLOR SPECIFIED. CONCRETE COLORING POWDER APPLIED WITH A "SHAKE–ON" METHOD SHALL NOT BE PERMITTED.

RAISED PAVEMENT MARKERS (RPM)

2 1. RAISED PAVEMENT MARKERS SHALL BE 3M SERIES 290 ENGINEERED THERMOPLASTIC MARKER OR EQUAL AS APPROVED BY THE CITY. CERAMICS SHALL NOT BE USED.

2. RAISED PAVEMENT MARKERS SHALL MEET THE FOLLOWING REQUIREMENTS FOR THE TYPES LISTED:

TYPE I–A: TYPE I–A MUST CONTAIN AN APPROACH FACE THAT RETRO–REFLECTS AMBER LIGHT. THE BODY, OTHER THAN THE RETRO–REFLECTIVE FACE MUST BE YELLOW.

TYPE I–C: TYPE I–C MUST CONTAIN AN APPROACH FACE THAT RETRO–REFLECTS WHITE LIGHT. THE BODY, OTHER THAN THE RETRO–REFLECTIVE FACE MUST BE WHITE OR SILVER–WHITE.

TYPE I–R: TYPE I–R MUST CONTAIN A TRAILING FACE THAT RETRO–REFLECTS RED LIGHT. THE BODY, OTHER THAN THE RETRO–REFLECTIVE FACE MUST BE WHITE OR SILVER–WHITE.

TYPE II–A–A: TYPE II–A–A MUST CONTAIN TWO RETRO–REFLECTIVE FACES (APPROACH AND TRAILING) EACH THAT RETRO–REFLECT AMBER LIGHT. THE BODY, OTHER THAN THE RETRO–REFLECTIVE FACES, MUST BE YELLOW.

TYPE II–B–B: TYPE II–B–B MUST CONTAIN TWO RETRO–REFLECTIVE FACES (APPROACH AND TRAILING) EACH THAT RETRO–REFLECT BLUE LIGHT. THE BODY, OTHER THAN THE RETRO–REFLECTIVE FACES, MUST BE BLUE.

TYPE II–C–R: TYPE II–C–R MUST CONTAIN TWO RETRO–REFLECTIVE FACES, AN APPROACH FACE THAT RETRO–REFLECTS WHITE LIGHT AND A TRAILING FACE THAT RETRO–REFLECTS RED LIGHT. THE BODY, OTHER THAN THE RETRO–REFLECTIVE FACES, MUST BE WHITE OR SILVER–WHITE.

TYPE W: TYPE W HAS A WHITE BODY AND NO REFLECTIVE FACES.

TYPE Y: TYPE Y HAS AN AMBER (YELLOW) BODY AND NO REFLECTIVE FACES.

NO.	LOCAL EXCEPTION	BY	DATE
2	ADD RAISED PAVEMENT MARKER NOTES AND TYPES.	SWL	JUL. '14
1	ADD CONCRETE CLASS TABLE.	SWL	JUL. '14

THE CITY OF COPPELL TEXAS 1890

STANDARD CONSTRUCTION DETAILS

PAVEMENT SYSTEMS
GENERAL NOTES

CITY OF COPPELL DALLAS COUNTY, TEXAS

STD. SPEC. REFERENCE

STANDARD DETAIL
2195

PATH: S:\Standard_Details\New_Dets_modified\SDCoppell2005.dwg

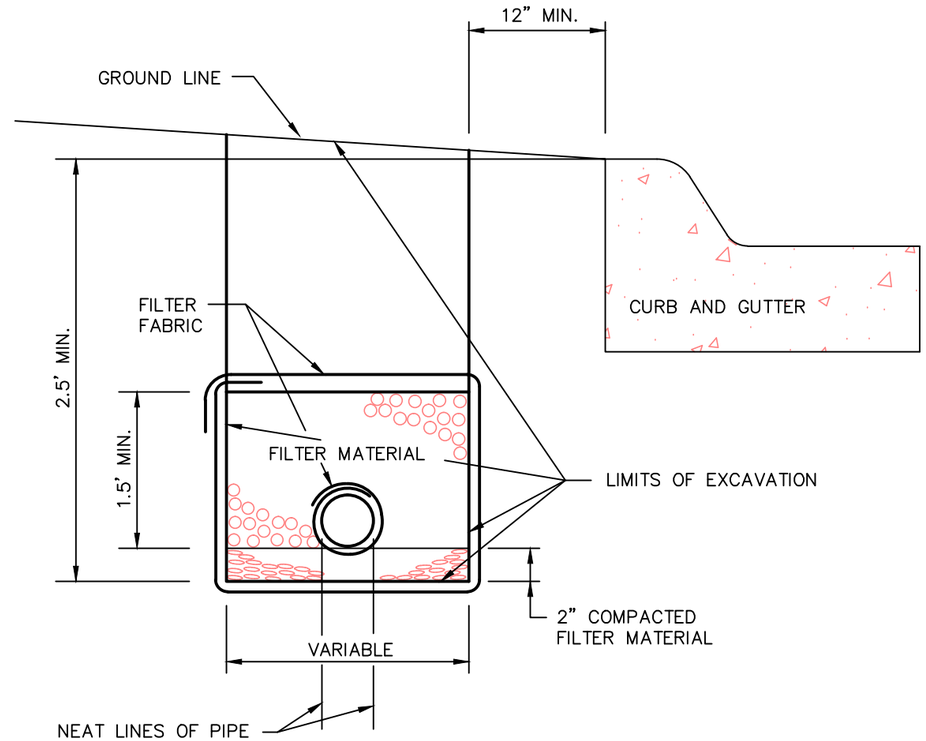

SECTION

N.T.S.

LIMITS OF EXCAVATION

DEPTH OF TRENCH (FT.)	DIST. IN FT. OUTSIDE NEAT LINES OF PIPE SUBDRAIN
0 TO 6	1.00
6 TO 10	1.50
10 TO 15	2.00
OVER 15	2.50

FILTER MATERIAL SPECIFICATIONS

SIEVE SIZE	PERCENTAGE RETAINED ON SIEVE TYPE A	PERCENTAGE RETAINED ON SIEVE TYPE B
1 1/2	---	0 – 10
3/4	0 – 10	20 – 40
3/8	15 – 35	---
NO. 4	35 – 55	40 – 60

MATERIAL FINER THAN NO. 4 SIEVE	
4	---
20	35 – 65
50	75 – 100

TYPES OF PIPE ACCEPTABLE FOR USE AS SUBDRAIN

1. PERFORATED CORRUGATED METAL PIPE.
2. PERFORATED P.V.C . PIPE.
3. PERFORATED POLYETHYLENE PIPE.

North Central Texas Council of Governments

NOTE: STANDARDS ARE ADOPTED FROM THE NCTOG STANDARD DRAWINGS DATED NOV. '96, WITH LOCAL EXCEPTIONS.

NO.	LOCAL EXCEPTION	BY	DATE

THE CITY OF COPPELL TEXAS 1890

STANDARD CONSTRUCTION DETAILS

SUBDRAINS

PAVEMENT SUBGRADE

CITY OF COPPELL DALLAS COUNTY, TEXAS

STD. SPEC. REFERENCE 504., 508.

STANDARD DETAIL 2200

PATH: S:\Standard_Details\New_Dets_modified\SDCoppell2005.dwg

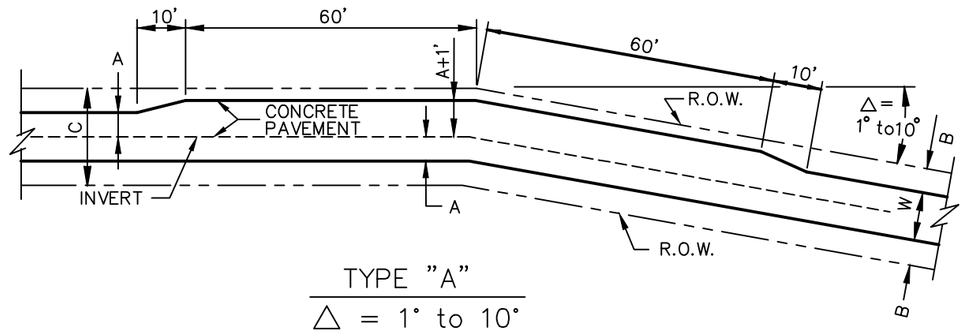

TYPE "A"

△ = 1° to 10°

N.T.S.

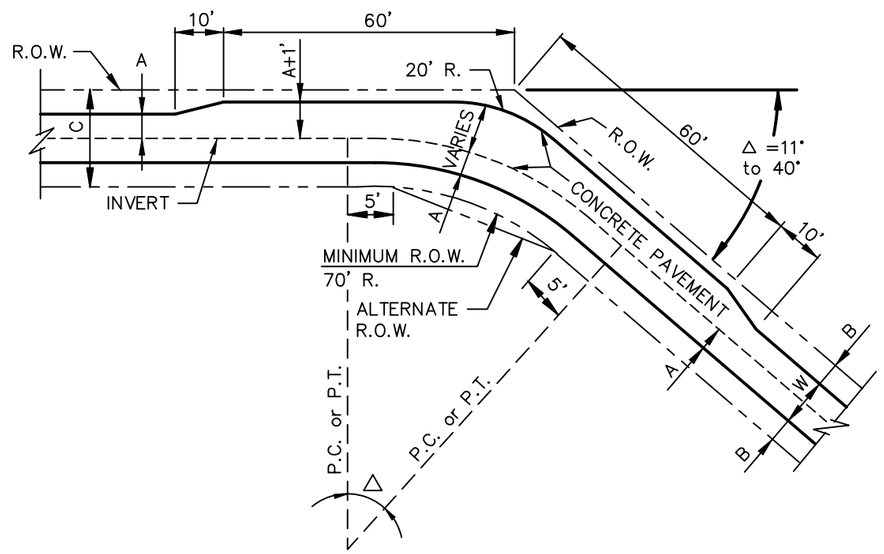

TYPE "B"

△ = 11° to 40°

N.T.S.

NOTE:

1. DIMENSIONS A,B,C AND W SHALL BE SPECIFIED ON THE PLANS IN ACCORDANCE WITH STANDARD CONSTRUCTION DETAIL 2040.

North Central Texas Council of Governments

NOTE: STANDARDS ARE ADOPTED FROM THE NCTOG STANDARD DRAWINGS DATED NOV. '96, WITH LOCAL EXCEPTIONS.

NO.	LOCAL EXCEPTION	BY	DATE

THE CITY OF COPPELL TEXAS 1890

STANDARD CONSTRUCTION DETAILS

ALLEY GEOMETRICS

TYPE 'A' AND TYPE 'B'

CITY OF COPPELL DALLAS COUNTY, TEXAS

STD. SPEC. REFERENCE

301., 303.

STANDARD DETAIL

2210

PATH: S:\Standard_Details\New_Dets_modified\SDCoppell2005.dwg

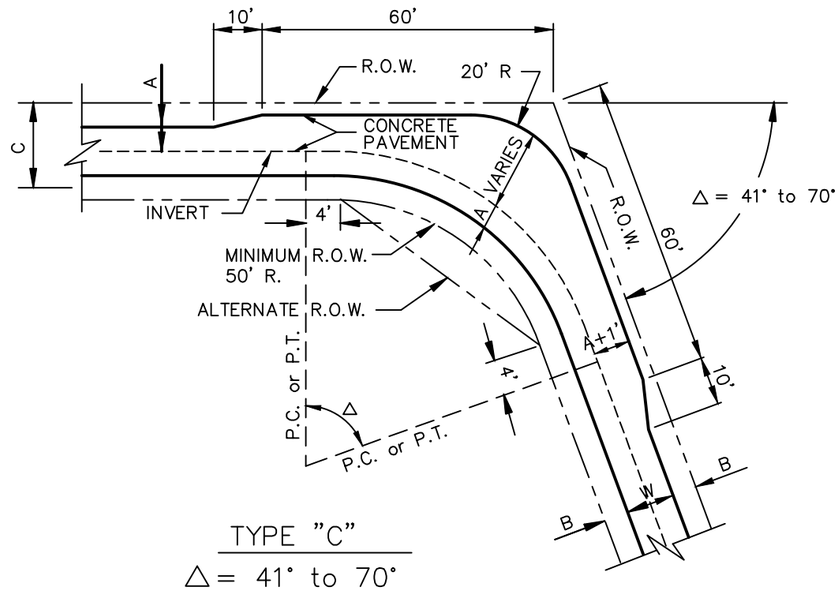

TYPE "C"

△ = 41° to 70°

N.T.S.

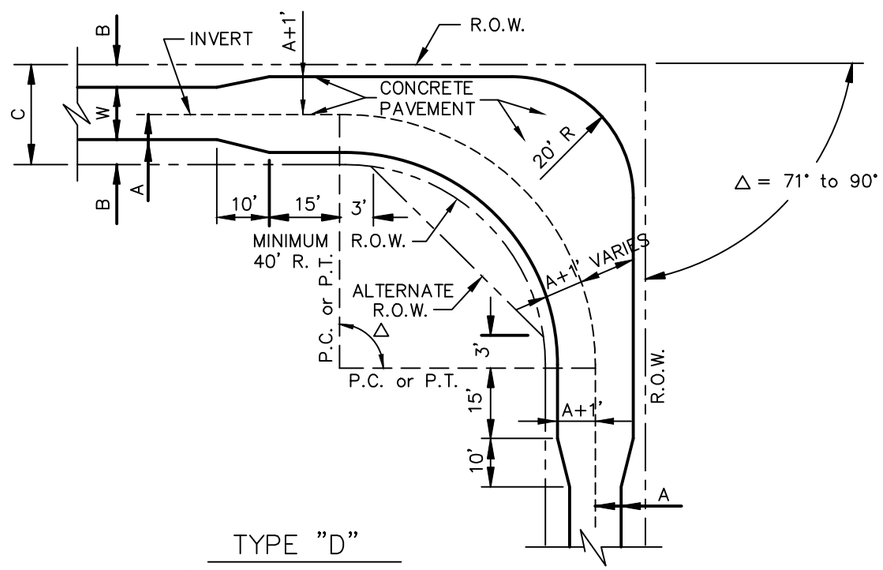

TYPE "D"

△ = 71° to 90°

N.T.S.

NOTE:

1. DIMENSIONS A,B,C AND W SHALL BE SPECIFIED ON THE PLANS IN ACCORDANCE WITH STANDARD CONSTRUCTION DETAIL 2040.

North Central Texas Council of Governments

NOTE: STANDARDS ARE ADOPTED FROM THE NCTOG STANDARD DRAWINGS DATED NOV. '96, WITH LOCAL EXCEPTIONS.

NO.	LOCAL EXCEPTION	BY	DATE

THE CITY OF COPPELL TEXAS 1890

STANDARD CONSTRUCTION DETAILS

ALLEY GEOMETRICS

TYPE 'C' AND TYPE 'D'

CITY OF COPPELL DALLAS COUNTY, TEXAS

STD. SPEC. REFERENCE 301., 303.

STANDARD DETAIL 2220

PATH: S:\Standard_Details\New_Dets_modified\SDCoppell2005.dwg

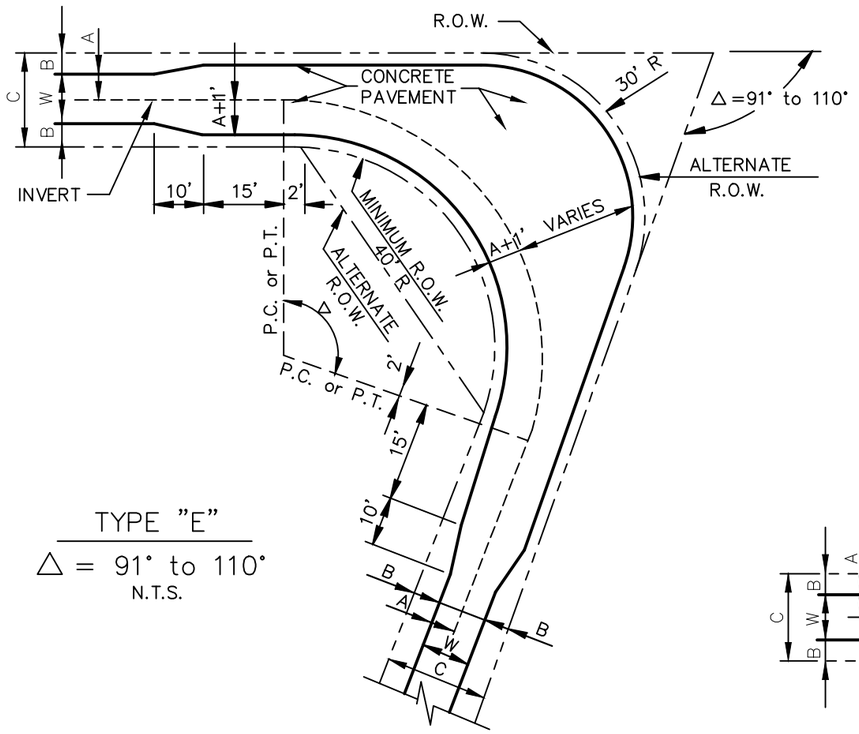

TYPE "E"

Δ = 91° to 110°

N.T.S.

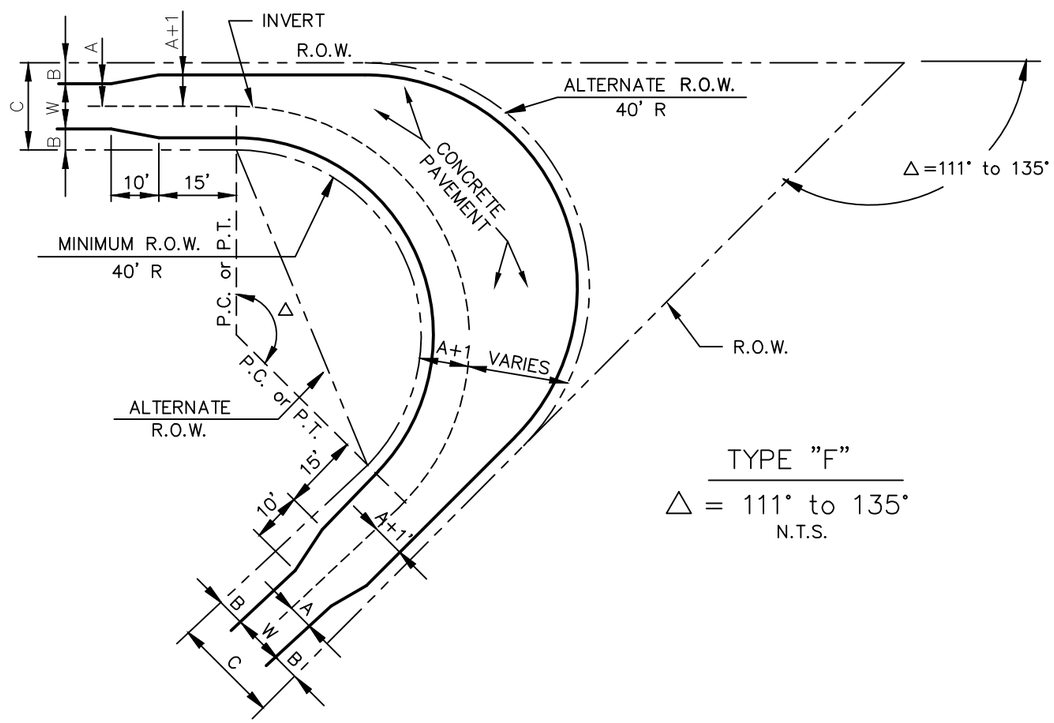

TYPE "F"

Δ = 111° to 135°

N.T.S.

NOTE:

1. DIMENSIONS A,B,C AND W SHALL BE SPECIFIED ON THE PLANS IN ACCORDANCE WITH STANDARD CONSTRUCTION DETAIL 2040.

North Central Texas Council of Governments

NOTE: STANDARDS ARE ADOPTED FROM THE NCTOG STANDARD DRAWINGS DATED NOV. '96, WITH LOCAL EXCEPTIONS.

NO.	LOCAL EXCEPTION	BY	DATE

THE CITY OF COPPELL TEXAS 1890

STANDARD CONSTRUCTION DETAILS

ALLEY GEOMETRICS

TYPE 'E' AND TYPE 'F'

CITY OF COPPELL DALLAS COUNTY, TEXAS

STD. SPEC. REFERENCE 301., 303.

STANDARD DETAIL 2230

PATH: S:\Standard_Details\New_Dets_modified\SDCoppell2005.dwg

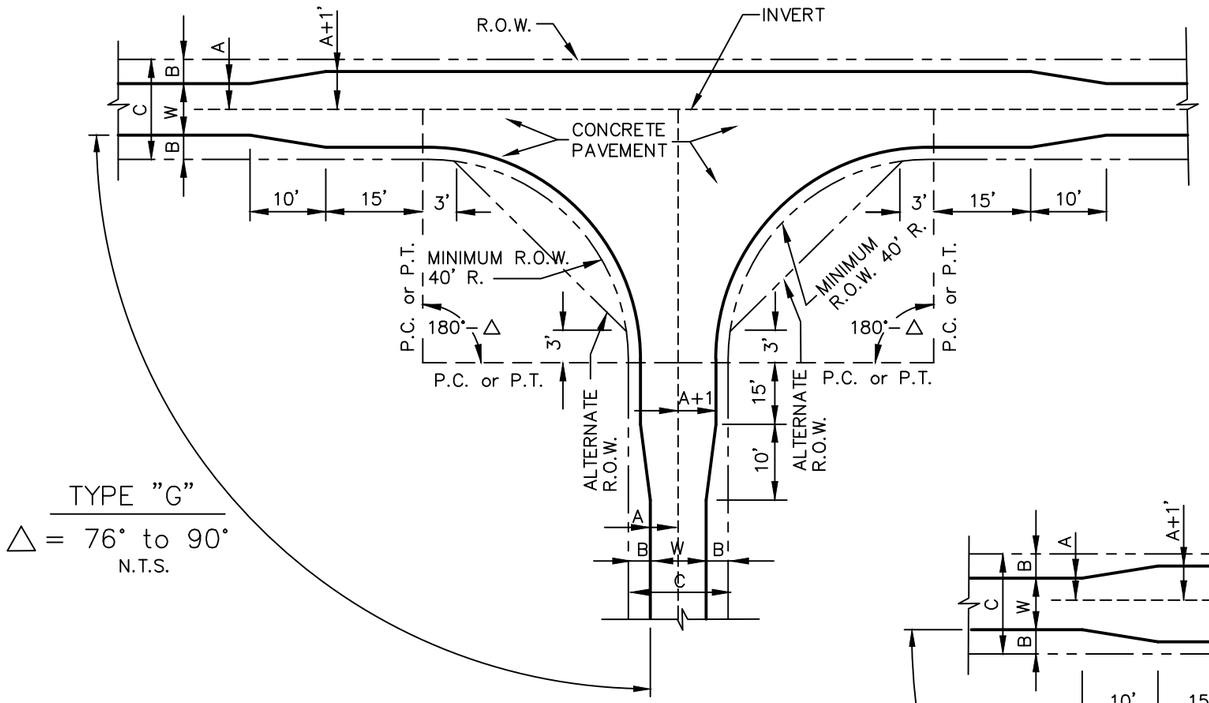

TYPE "G"

△ = 76° to 90°

N.T.S.

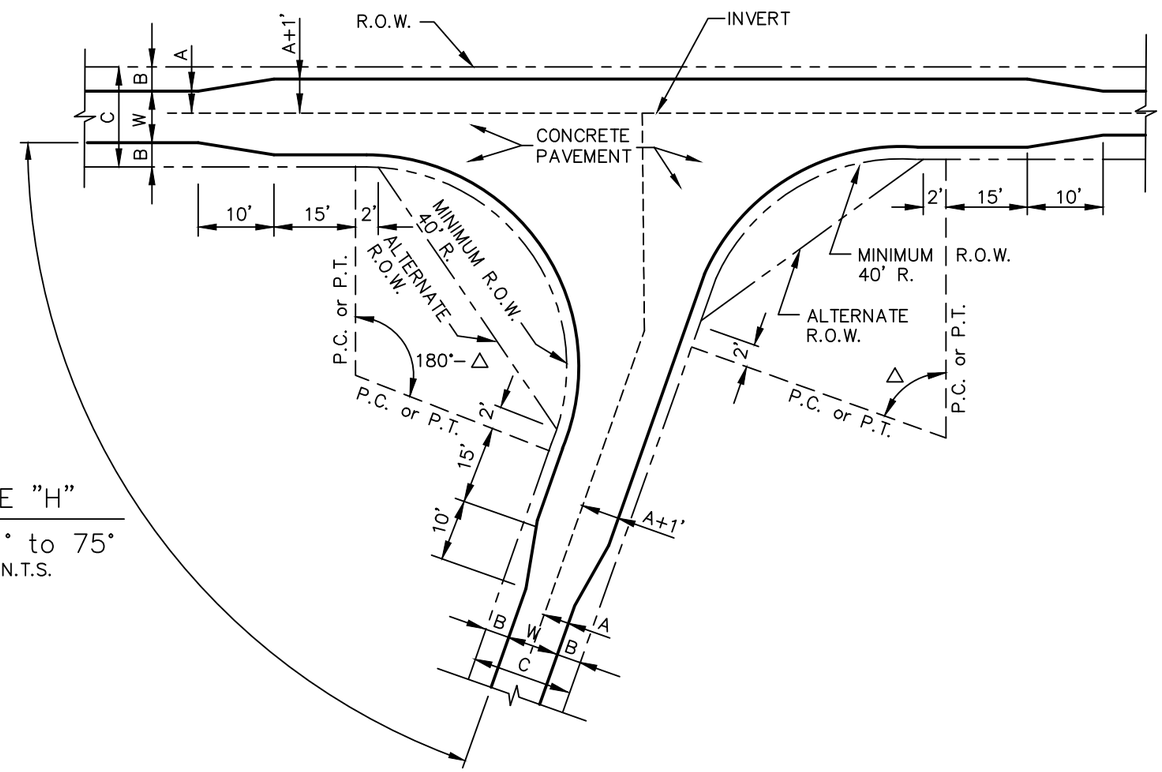

TYPE "H"

△ = 61° to 75°

N.T.S.

NOTE:

1. DIMENSIONS A,B,C AND W SHALL BE SPECIFIED ON THE PLANS IN ACCORDANCE WITH STANDARD CONSTRUCTION DETAIL 2040.

North Central Texas Council of Governments

NOTE: STANDARDS ARE ADOPTED FROM THE NCTOG STANDARD DRAWINGS DATED NOV. '96, WITH LOCAL EXCEPTIONS.

NO.	LOCAL EXCEPTION	BY	DATE

THE CITY OF COPPELL TEXAS 1890

STANDARD CONSTRUCTION DETAILS

ALLEY GEOMETRICS

TYPE 'G' AND TYPE 'H'

CITY OF COPPELL DALLAS COUNTY, TEXAS

STD. SPEC. REFERENCE

301., 303.

STANDARD DETAIL

2240

PATH: S:\Standard_Details\New_Dets_modified\SDCoppell2005.dwg

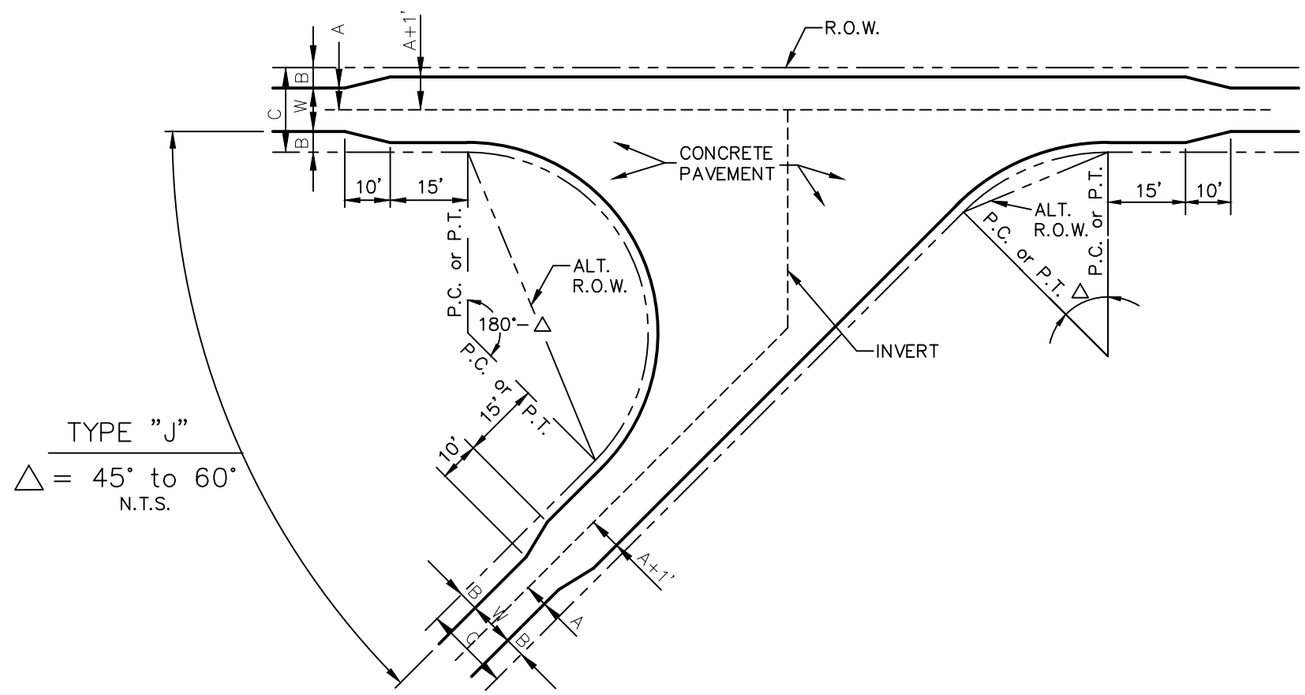

TYPE "J"

△ = 45° to 60°

N.T.S.

NOTE:

1. DIMENSIONS A,B,C AND W SHALL BE SPECIFIED ON THE PLANS IN ACCORDANCE WITH STANDARD CONSTRUCTION DETAIL 2040.

North Central Texas Council of Governments

NOTE: STANDARDS ARE ADOPTED FROM THE NCTOG STANDARD DRAWINGS DATED NOV. '96, WITH LOCAL EXCEPTIONS.

NO.	LOCAL EXCEPTION	BY	DATE

THE CITY OF COPPELL TEXAS 1890

STANDARD CONSTRUCTION DETAILS

ALLEY GEOMETRICS

TYPE 'J'

CITY OF COPPELL DALLAS COUNTY, TEXAS

STD. SPEC. REFERENCE 301., 303.

STANDARD DETAIL 2250

PATH: S:\Standard_Details\New_Dets_modified\SDCoppell2005.dwg

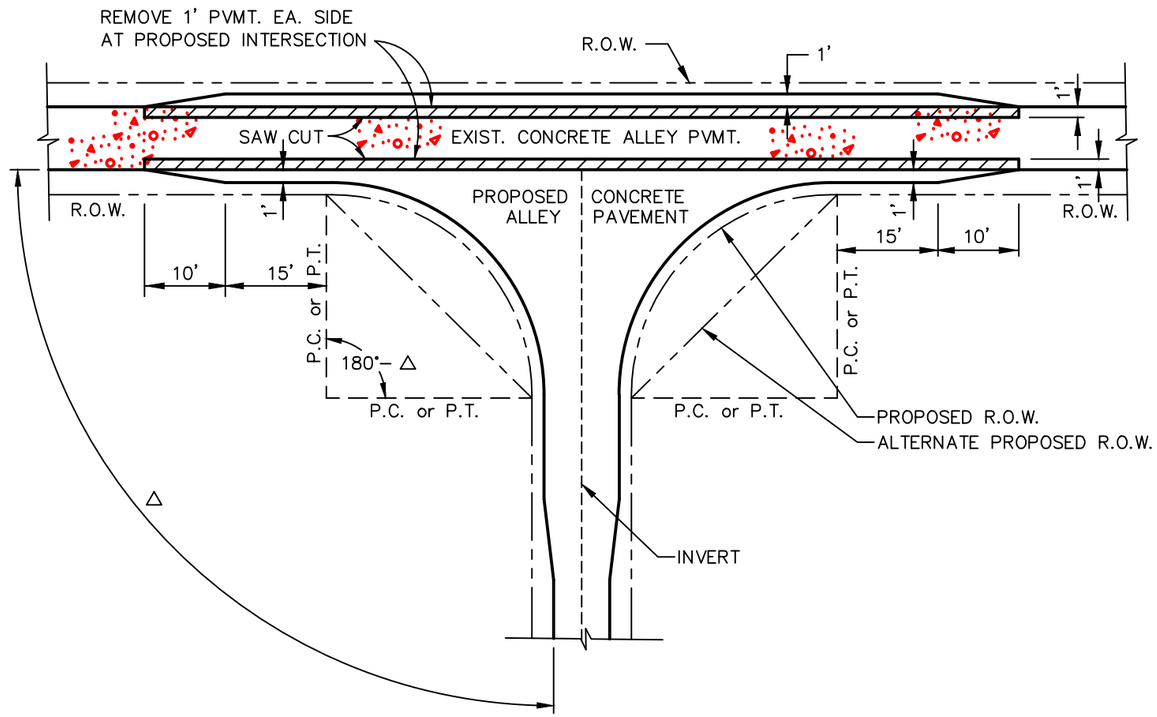

INTERSECTION OF PROPOSED ALLEY
WITH EXISTING ALLEY PAVEMENT

N.T.S.

NOTE:

GEOMETRICS OF PROPOSED ALLEY SHALL BE SHOWN ON THE PLANS IN ACCORDANCE WITH TYPE "G", "H", OR "J".

North Central Texas Council of Governments

NOTE: STANDARDS ARE ADOPTED FROM THE NCTOG STANDARD DRAWINGS DATED NOV. '96, WITH LOCAL EXCEPTIONS.

NO.	LOCAL EXCEPTION	BY	DATE

THE CITY OF COPPELL TEXAS 1890

STANDARD CONSTRUCTION DETAILS

ALLEY INTERSECTION

CONNECTION OF PROPOSED TO EXISTING

CITY OF COPPELL DALLAS COUNTY, TEXAS

STD. SPEC. REFERENCE
301., 303.

STANDARD DETAIL
2260

PATH: S:\Standard_Details\New_Dets_modified\SDCoppell2005.dwg

FOR METAL BEAM GUARD RAIL AND BARRICADE DETAILS, SEE LATEST TEXAS DEPARTMENT OF TRANSPORTATION GUIDELINES

North Central Texas Council of Governments

NOTE: STANDARDS ARE ADOPTED FROM THE NCTOG STANDARD DRAWINGS DATED NOV. '96, WITH LOCAL EXCEPTIONS.

NO.	LOCAL EXCEPTION	BY	DATE

THE CITY OF COPPELL TEXAS 1890

STANDARD CONSTRUCTION DETAILS

METAL BEAM GUARD RAIL AND BARRICADE

CITY OF COPPELL DALLAS COUNTY, TEXAS

STD. SPEC. REFERENCE 801.

STANDARD DETAIL 2270

PATH: S:\Standard_Details\New_Dets_modified\SDCoppell2005.dwg

FOR TRAFFIC CONTROL AND SIGNAGE
DETAILS, SEE LATEST TEXAS MANUAL ON
UNIFORM TRAFFIC CONTROL DEVICES (T.M.U.T.C.D.)

North Central Texas Council of Governments

NOTE: STANDARDS ARE ADOPTED FROM THE NCTOG STANDARD DRAWINGS DATED NOV. '96, WITH LOCAL EXCEPTIONS.

NO.	LOCAL EXCEPTION	BY	DATE

THE CITY OF COPPELL TEXAS 1890

STANDARD CONSTRUCTION DETAILS

TRAFFIC CONTROL AND SIGNAGE

CITY OF COPPELL DALLAS COUNTY, TEXAS

STD. SPEC. REFERENCE 801.

STANDARD DETAIL 2280

PATH: S:\Standard_Details\New_Dets_modified\SDCoppell2005.dwg

FIRE LANE GENERAL NOTES:

1. MINIMUM FIRE LANE WIDTH SHALL BE 24' CLEAR (FACE OF CURB TO FACE OF CURB) WITH NO HORIZONTAL OBSTRUCTIONS.
2. MINIMUM FIRE LANE VERTICAL CLEARANCE SHALL BE 14'–0".
3. FIRE LANE SHALL INTERSECT WITH A DEDICATED PUBLIC STREET RIGHT OF WAY. FIRE LANES OVER 150' IN LENGTH SHALL INTERSECT WITH A PUBLIC STREET AT EACH END OF THE FIRE LANE, OR TERMINATE IN A CONFIGURATION SHOWN ON STANDARD CONSTRUCTION DETAIL 2310.
4. FIRE LANE SHALL BE STRIPED AND LETTERED AS SHOWN IN STANDARD CONSTRUCTION DETAIL 2320.
5. FIRE LANE AND WATER LINE WITH FIRE HYDRANTS SHALL BE COMPLETED PRIOR TO ANY BUILDING CONSTRUCTION. FIRE LANE SHALL BE UNOBSTRUCTED AND AVAILABLE FOR USE BY THE FIRE DEPARTMENT DURING BUILDING CONSTRUCTION.

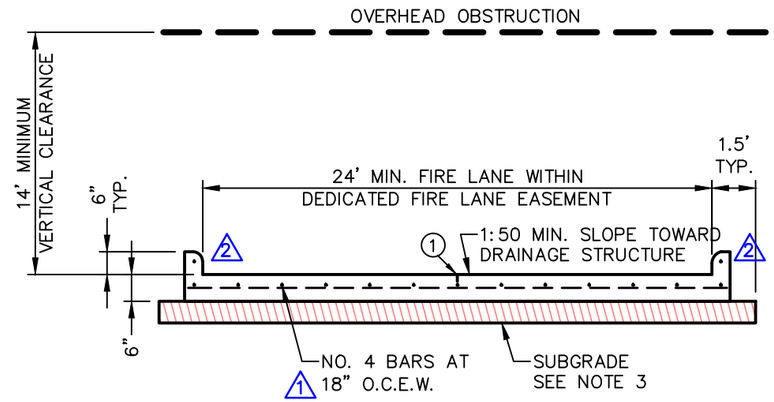

24' FIRE LANE
(LOCATED OUTSIDE OF PARKING AREA)
N.T.S.

(1) SAWED LONGITUDINAL CONTRACTION JOINT ON PAVEMENT LESS THAN 8" THICK. KEY WAY CONSTRUCTION JOINT ON PAVEMENT WITH THICKNESS OF 8" OR GREATER. SEE STANDARD CONSTRUCTION DETAIL 2050.

NOTES:

1. MIN. PAVEMENT STRENGTH SHALL CLASS "C", OR AS SPECIFIED BY CITY.
2. CURB HEIGHT AND WIDTH SHALL BE 6", OR AS SPECIFIED BY CITY. SEE STANDARD CONSTRUCTION DETAIL 2120.
3. SUBGRADE (MIN. REQUIREMENTS–UNLESS OTHERWISE APPROVED BY CITY ENGINEER). SUBGRADE UNDER ALL PAVEMENT SHALL BE INITIALLY MIXED 8" THICK AND RE–MIXED 6" THICK AND SHALL BE STABILIZED WITH 6% MIN. BY WEIGHT OF HYDRATED LIME (GENERALLY ±40 LBS./S.Y.) AND COMPACTED TO A DENSITY NOT LESS THAN 95% STANDARD PROCTOR DENSITY. ALTERNATIVE SUBGRADES, SUPPORTED BY LABORATORY TESTS, MAY BE SUBMITTED TO THE CITY ENGINEER FOR APPROVAL.
4. (3) PAVEMENT SURFACE FINISH SHALL BE PARALLEL TO TRAFFIC LANES AND SHALL BE BAKER BROOM FINISH UNLESS OTHERWISE SPECIFIED BY CITY.
5. ALL DIMENSIONS TO BACK OF CURB AND IN FEET UNLESS OTHERWISE SHOWN.
6. FOR TRANSVERSE JOINT SPACING, SEE STANDARD CONSTRUCTION DETAIL 2060.

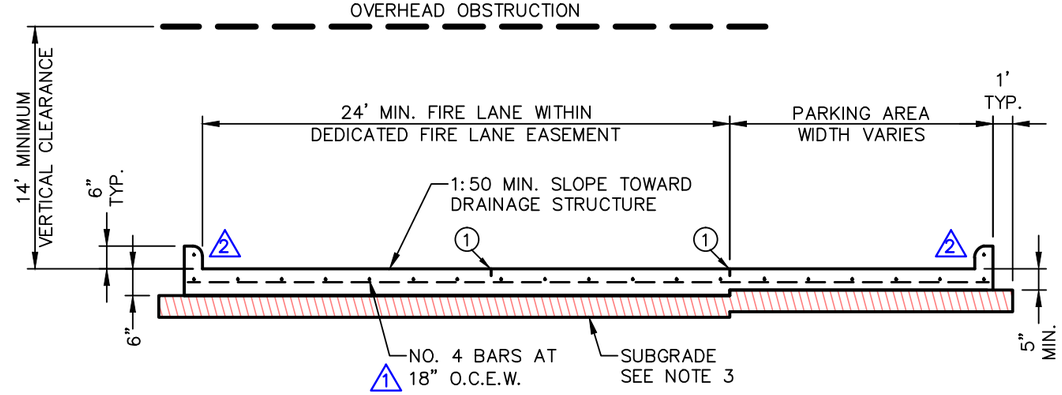

24' FIRE LANE WITH ADJACENT PARKING AREA
N.T.S.

North Central Texas Council of Governments

NOTE: STANDARDS ARE ADOPTED FROM THE NCTOG STANDARD DRAWINGS DATED NOV. '96, WITH LOCAL EXCEPTIONS.

NO.	LOCAL EXCEPTION	BY	DATE
3	CHANGED FINISH FROM TRANSVERSE STEEL TINE TO PARALLEL BAKER BROOM	SWL	JUL. '14
2	ADDED NO. 4 BAR TO CURB	SWL	JUL. '14
1	CHANGED BAR SIZE FROM NO. 3 TO NO. 4	SWL	JUL. '14

THE CITY OF COPPELL TEXAS 1890

STANDARD CONSTRUCTION DETAILS

FIRE LANE AND PARKING LOT
REINFORCED CONCRETE PAVEMENT

CITY OF COPPELL DALLAS COUNTY, TEXAS

STD. SPEC. REFERENCE
301., 303.

STANDARD DETAIL
2290

PATH: S:\Standard_Details\New_Dets_modified\SDCoppell2005.dwg

FIRE LANE GENERAL NOTES:

1. MINIMUM FIRE LANE WIDTH SHALL BE 24' CLEAR (FACE OF CURB TO FACE OF CURB) WITH NO HORIZONTAL OBSTRUCTIONS.
2. MINIMUM FIRE LANE VERTICAL CLEARANCE SHALL BE 14'–0".
3. FIRE LANE SHALL INTERSECT WITH A DEDICATED PUBLIC STREET RIGHT OF WAY. FIRE LANES OVER 150' IN LENGTH SHALL INTERSECT WITH A PUBLIC STREET AT EACH END OF THE FIRE LANE, OR TERMINATE IN A CONFIGURATION SHOWN ON STANDARD CONSTRUCTION DETAIL 2310.
4. FIRE LANE SHALL BE STRIPED AND LETTERED AS SHOWN IN STANDARD CONSTRUCTION DETAIL 2320.
5. FIRE LANE AND WATER LINE WITH FIRE HYDRANTS SHALL BE COMPLETED PRIOR TO ANY BUILDING CONSTRUCTION. FIRE LANE SHALL BE UNOBSTRUCTED AND AVAILABLE FOR USE BY THE FIRE DEPARTMENT DURING BUILDING CONSTRUCTION.

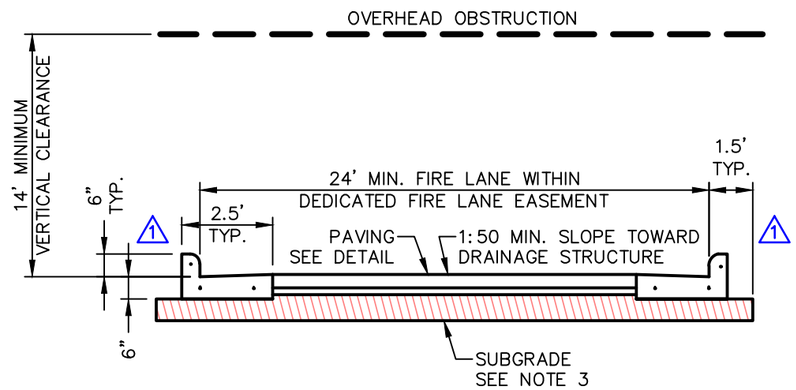

24' FIRE LANE
(LOCATED OUTSIDE OF PARKING AREA)
N.T.S.

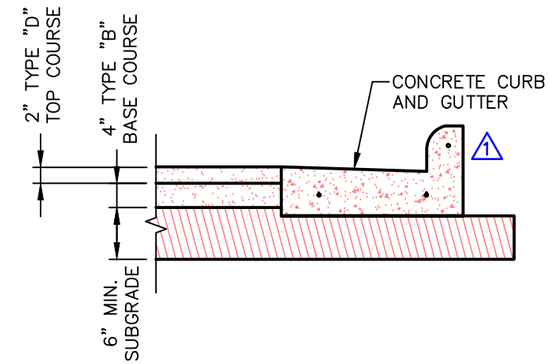

ASPHALT FIRE LANE PAVING DETAIL
N.T.S.

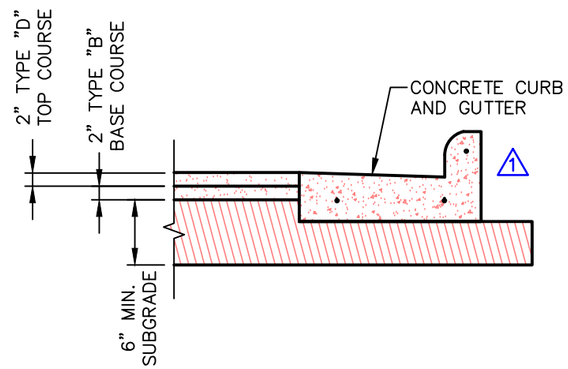

ASPHALT PARKING LOT PAVING DETAIL
N.T.S.

NOTES:

1. 4" ASPHALT PAVING BETWEEN CONCRETE CURB/GUTTER SHALL CONSIST OF A 2" TYPE "B" BASE COURSE AND A 2" TYPE "D" TOP COURSE. PAVING WITHIN THE FIRE LANE SHALL BE OF SUFFICIENT STRENGTH TO SUPPORT A CONCENTRATED LOAD OF 40,000 POUNDS.
2. CURB HEIGHT AND WIDTH SHALL BE 6", OR AS SPECIFIED BY CITY. SEE STANDARD CONSTRUCTION DETAIL 2120.
3. SUBGRADE (MIN. REQUIREMENTS–UNLESS OTHERWISE APPROVED BY CITY ENGINEER). SUBGRADE UNDER ALL PAVEMENT SHALL BE INITIALLY MIXED 8" THICK AND RE–MIXED 6" THICK AND SHALL BE STABILIZED WITH 6% MIN. BY WEIGHT OF HYDRATED LIME (GENERALLY ±40 LBS./S.Y.) AND COMPACTED TO A DENSITY NOT LESS THAN 95% STANDARD PROCTOR DENSITY. ALTERNATIVE SUBGRADES, SUPPORTED BY LABORATORY TESTS, MAY BE SUBMITTED TO THE CITY ENGINEER FOR APPROVAL.
4. PAVEMENT SURFACE FINISH SHALL BE SMOOTH AND UNIFORM. EACH PAVING COURSE SHALL HAVE A DENSITY OF NOT LESS THAN 95% OF THE STANDARD DENSITY ESTABLISHED BY THE TEXAS DEPARTMENT OF TRANSPORTATION BULLETIN C–14.
5. ALL DIMENSIONS TO BACK OF CURB AND IN FEET UNLESS OTHERWISE SHOWN.
6. FOR TRANSVERSE JOINT SPACING, SEE STANDARD CONSTRUCTION DETAIL 2060.
7. ASPHALT PAVING IS PERMITTED ONLY WITHIN THE HISTORIC OVERLAY ZONING DISTRICT AND ONLY WHEN AUTHORIZED BY A SPECIAL USE PERMIT (S.U.P.) APPROVED BY THE CITY COUNCIL.
8. ASPHALT PAVING NOT PERMITTED FOR NEW CONSTRUCTION OUTSIDE OF THE HISTORIC OVERLAY ZONING DISTRICT.

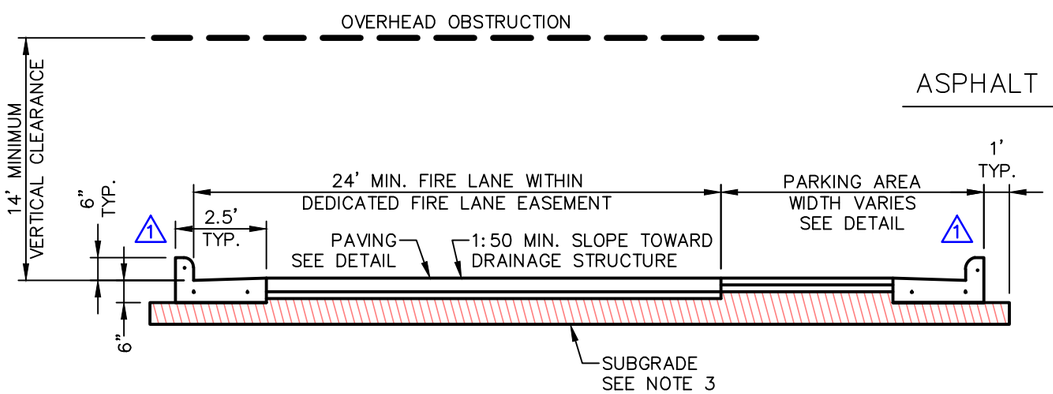

24' FIRE LANE WITH ADJACENT PARKING AREA
N.T.S.

North Central Texas Council of Governments

NOTE: STANDARDS ARE ADOPTED FROM THE NCTOG STANDARD DRAWINGS DATED NOV. '96, WITH LOCAL EXCEPTIONS.

NO.	LOCAL EXCEPTION	BY	DATE
1	ADDED NO. 4 BAR TO CURB	SWL	JUL. '14

THE CITY OF COPPELL TEXAS 1890

STANDARD CONSTRUCTION DETAILS

FIRE LANE AND PARKING LOT
HOT-MIX ASPHALTIC CONCRETE PAVEMENT

CITY OF COPPELL DALLAS COUNTY, TEXAS

STD. SPEC. REFERENCE
301., 303., 305.

STANDARD DETAIL
2300

PATH: S:\Standard_Details\New_Dets_modified\SDCoppell2005.dwg

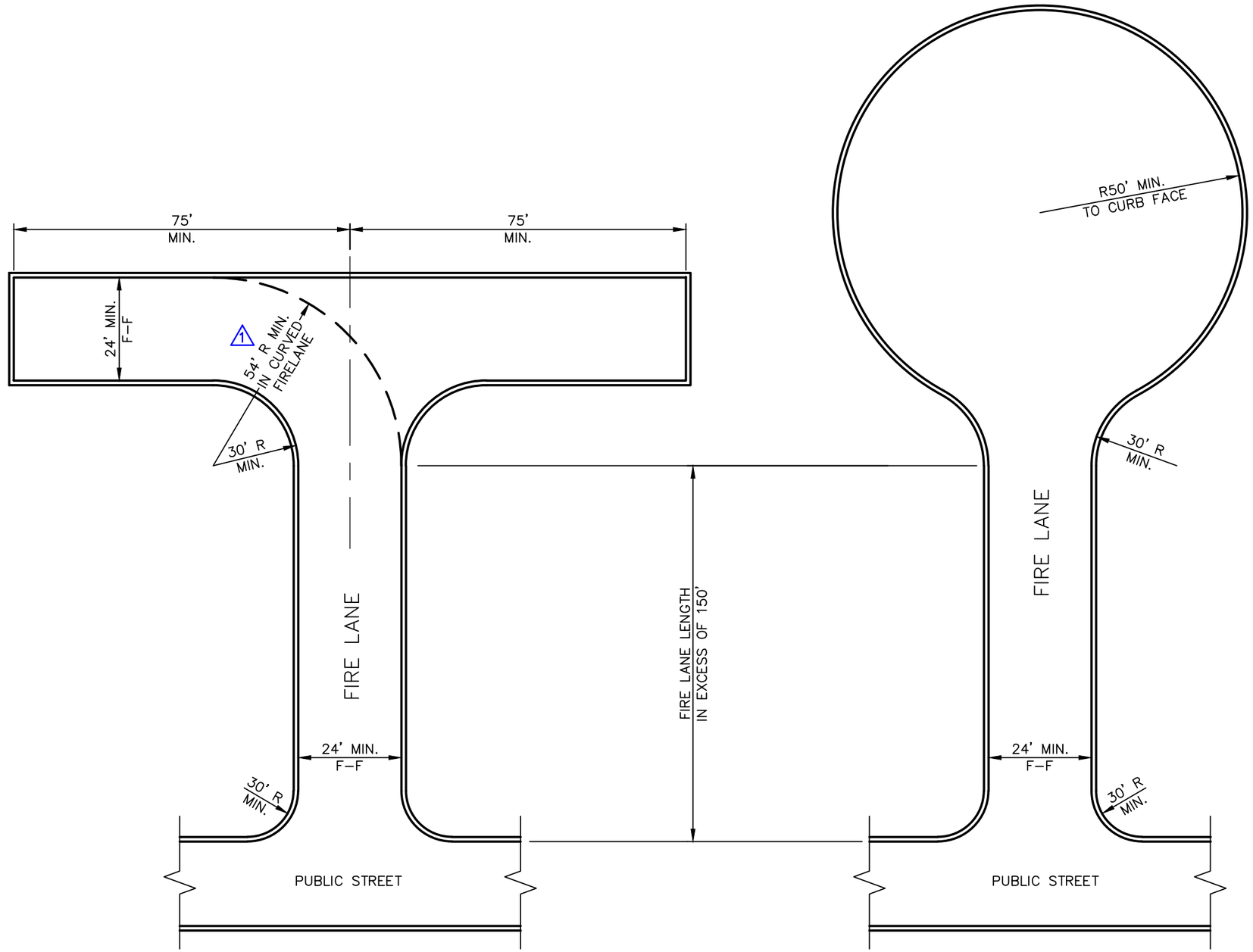

TYPE "A" TURNAROUND

N.T.S.

TYPE "B" TURNAROUND

N.T.S.

North Central Texas Council of Governments

NOTE: STANDARDS ARE ADOPTED FROM THE NCTOG STANDARD DRAWINGS DATED NOV. '96, WITH LOCAL EXCEPTIONS.

NO.	LOCAL EXCEPTION	BY	DATE
1	ADD FIRELANE OUTSIDE RADIUS DIMENSION.	SWL	JUL. '14

THE CITY OF COPPELL TEXAS 1890

STANDARD CONSTRUCTION DETAILS

FIRE LANE AND PARKING LOT
TYPE "A" AND TYPE "B" TURNAROUND

CITY OF COPPELL DALLAS COUNTY, TEXAS

STD. SPEC. REFERENCE

STANDARD DETAIL
2310

PATH: S:\Standard_Details\New_Dets_modified\SDCoppell2005.dwg

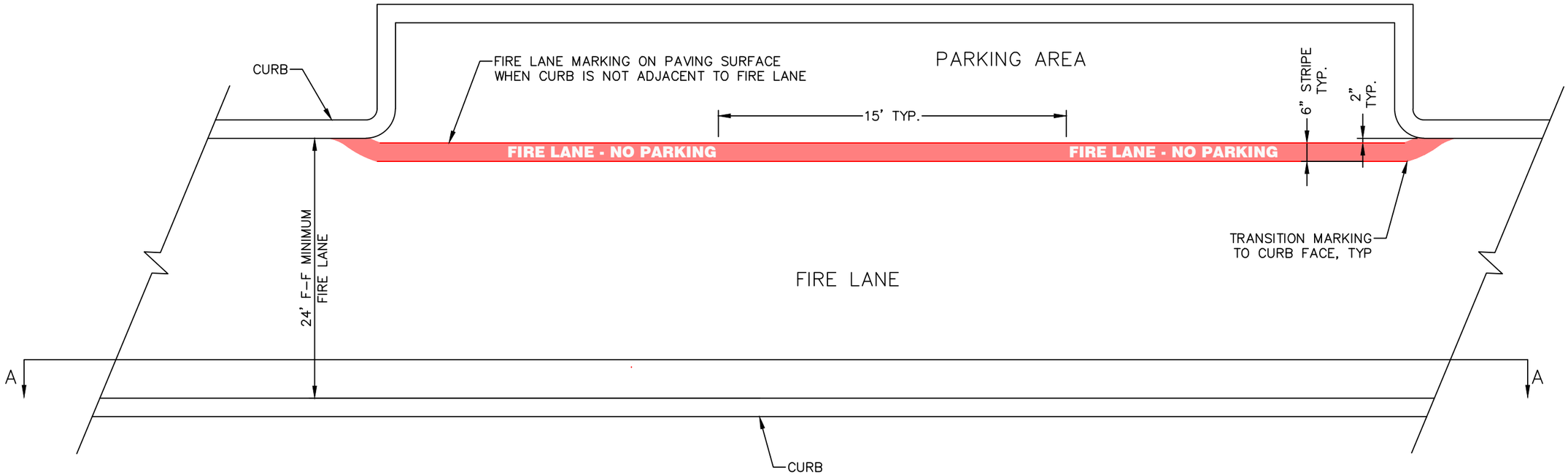

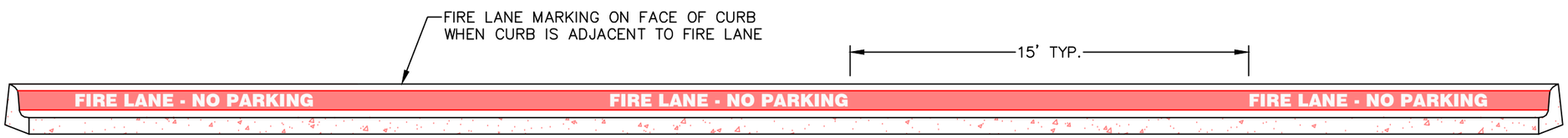

SECTION A–A

NOTES:

1. PAINT:
   a. STRIPE SHALL BE 6" INCHES WIDE PAINTED WITH AN EXTERIOR ACRYLIC LATEX PAINT. COLOR SHALL BE "TRAFFIC RED" GLIDDEN NO. 63251 OR APPROVED EQUAL.
   b. LETTERS SHALL BE FOUR (4) INCHES HIGH WITH THE WIDTH OF STROKE AT LEAST 1/2" PAINTED WITH AN EXTERIOR ACRYLIC LATEX PAINT. COLOR SHALL BE "TRAFFIC WHITE" GLIDDEN NO. 563245 OR APPROVED EQUAL.

2. APPLICATION:
   a. STRIPE MAY BE BRUSHED OR SPRAYED, ONE COAT TO FINISH.
   b. LETTERS SHALL BE STENCIL FORMED, BRUSH APPLIED AND SPACED AS SHOWN.

FIRE LANE MARKING

N.T.S.

North Central Texas Council of Governments

NOTE: STANDARDS ARE ADOPTED FROM THE NCTOG STANDARD DRAWINGS DATED NOV. '96, WITH LOCAL EXCEPTIONS.

NO.	LOCAL EXCEPTION	BY	DATE

THE CITY OF COPPELL TEXAS 1890

STANDARD CONSTRUCTION DETAILS

FIRE LANE AND PARKING LOT

FIRE LANE MARKING

CITY OF COPPELL DALLAS COUNTY, TEXAS

STD. SPEC. REFERENCE 804.

STANDARD DETAIL 2320

PATH: S:\Standard_Details\New_Dets_modified\SDCoppell2005.dwg

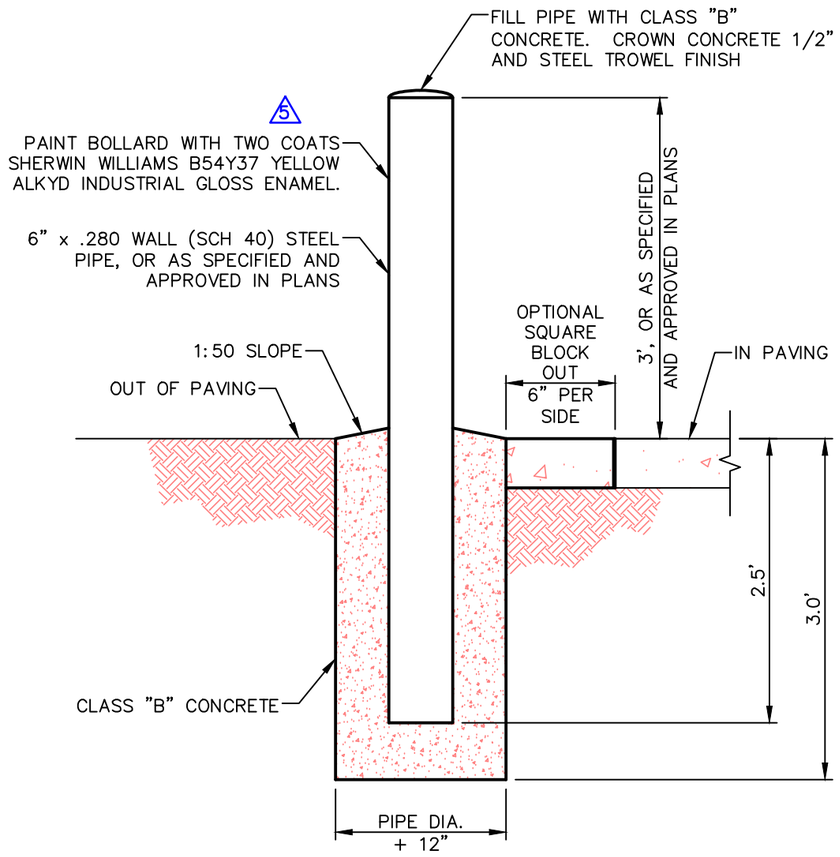

PIPE BOLLARD AND BASE

N.T.S.

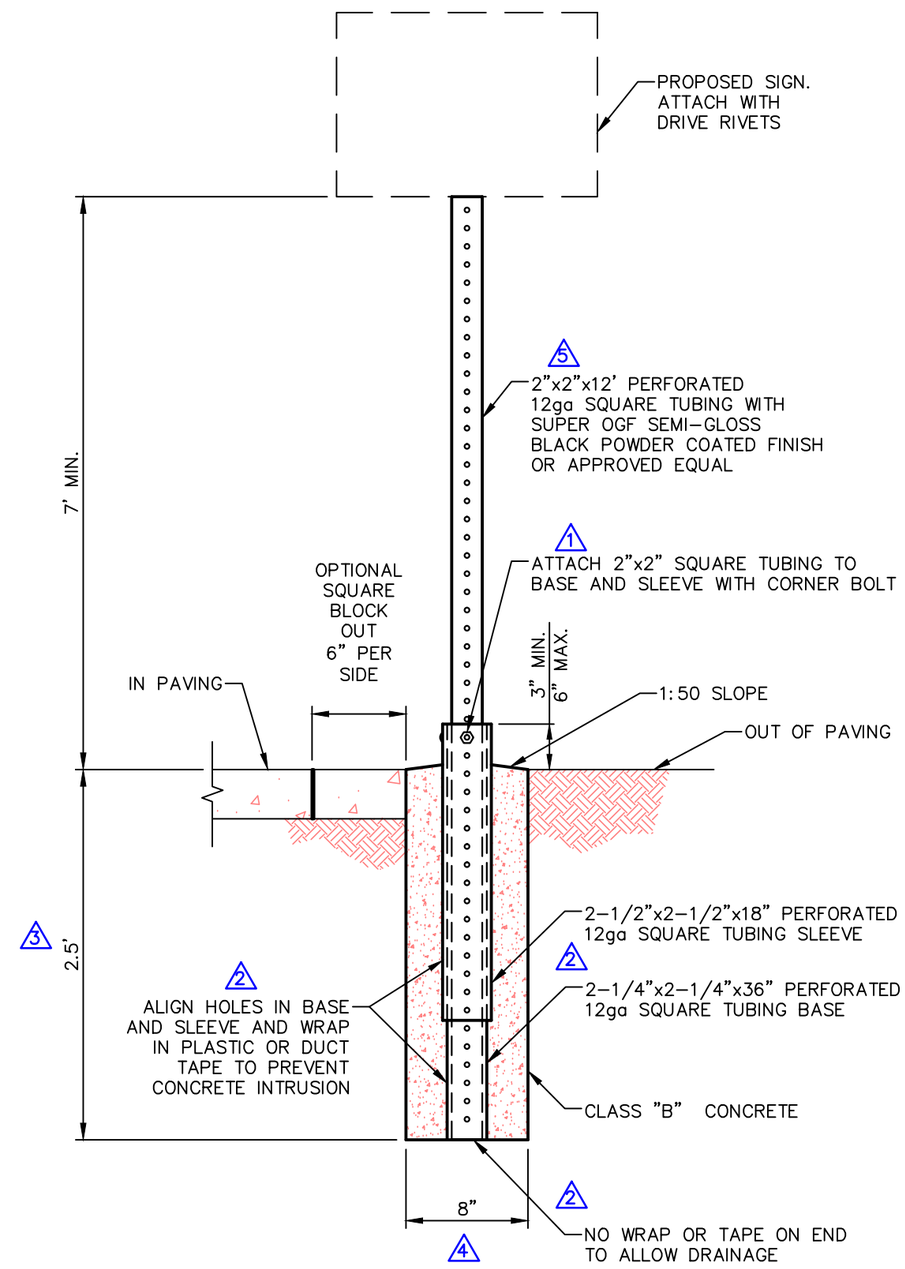

NOTE:
FOR SIGNAGE DETAILS, SEE LATEST TEXAS MANUAL ON UNIFORM TRAFFIC CONTROL DEVICES (T.M.U.T.C.D.).

North Central Texas Council of Governments

NOTE: STANDARDS ARE ADOPTED FROM THE NCTOG STANDARD DRAWINGS DATED NOV. '96, WITH LOCAL EXCEPTIONS.

NO.	LOCAL EXCEPTION	BY	DATE
5	CHANGE PAINT FINISH SPECIFICATION.	SWL	JUL. '14
4	INCREASE DIAMETER OF FOUNDATION FROM 6" TO 8".	SWL	JUL. '14
3	INCREASE DEPTH OF FOUNDATION FROM 2.0' TO 2.5'.	SWL	JUL. '14
2	ADD 2-1/4" BASE AND 2-1/2" SLEEVE, DELETE BREAK-A-WAY SECTION.	SWL	JUL. '14
1	ADD CORNER BOLT.	SWL	JUL. '14

THE CITY OF COPPELL TEXAS 1890

STANDARD CONSTRUCTION DETAILS

POURED CONCRETE BASE BOLLARD AND SIGN POST

CITY OF COPPELL DALLAS COUNTY, TEXAS

STD. SPEC. REFERENCE 702., 806.

STANDARD DETAIL 2330

PATH: S:\Standard_Details\New_Dets_modified\SDCoppell2005.dwg

NOTES:
1. ALL DIMENSIONS TO BACK OF CURB AND IN FEET UNLESS OTHERWISE SHOWN.
2. UNLESS OTHERWISE NOTED, THE DESIGN OF THE SIGNAL POLES, MAST ARMS, TRANSFORMER BASE AND DAVIT EXTENSIONS SHALL CONFORM TO THE REQUIREMENTS OF THE CURRENT A.A.S.H.T.O. STANDARD SPECIFICATIONS FOR STRUCTURAL SUPPORTS FOR HIGHWAY SIGNS, LUMINARIES AND TRAFFIC SIGNALS AND ALL ADDENDA THERETO. THE DESIGN SHALL WITHSTAND ICE AND 80 MPH WINDS WITH 140 MPH GUSTS.
3. SHOP DRAWINGS SHALL BE PROVIDED BY THE MANUFACTURER FOR APPROVAL PRIOR TO PRODUCTION OF ORDER.
4. SURFACE FINISH COLOR OF POLES, MAST ARMS AND BASES SHALL BE SUPER OGF SEMI-GLOSS BLACK POWDER COATED FINISH OR APPROVED EQUAL IN ACCORDANCE WITH THE SPECIFICATION.

-GENERAL GUIDELINE ONLY-
ALL ACCESSIBLE ROUTES AND TRAFFIC SIGNAL COMPONENTS MUST COMPLY WITH A.D.A., T.A.S. AND T.M.U.T.C.D. REGULATIONS.

A.P.S =POSSIBLE A.P.S. (ACCESSIBLE PEDESTRIAN SIGNAL) LOCATION

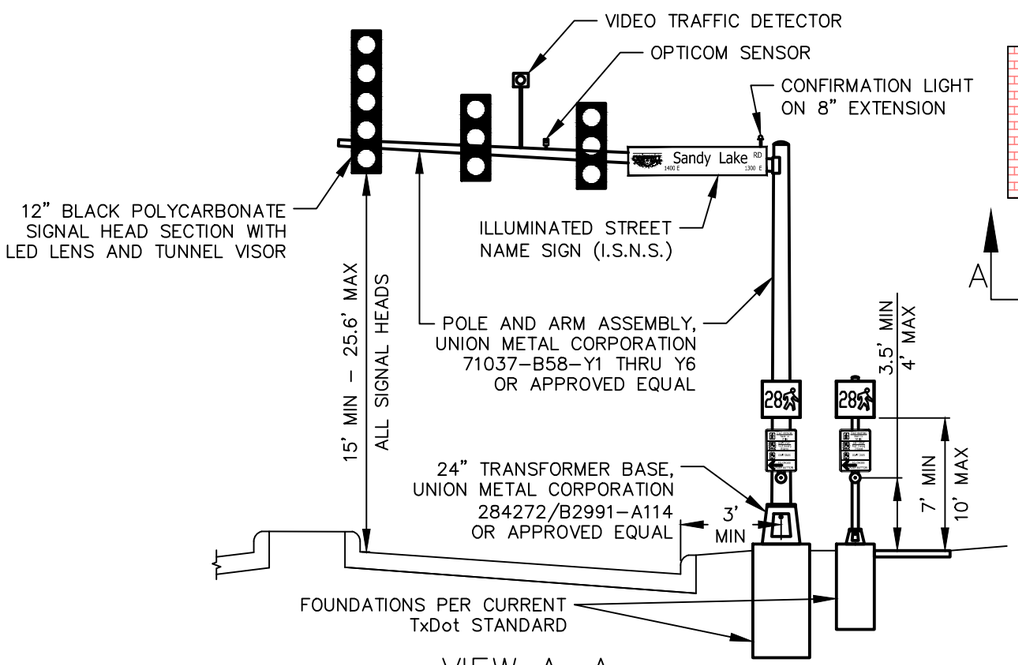

VIEW A-A
N.T.S.

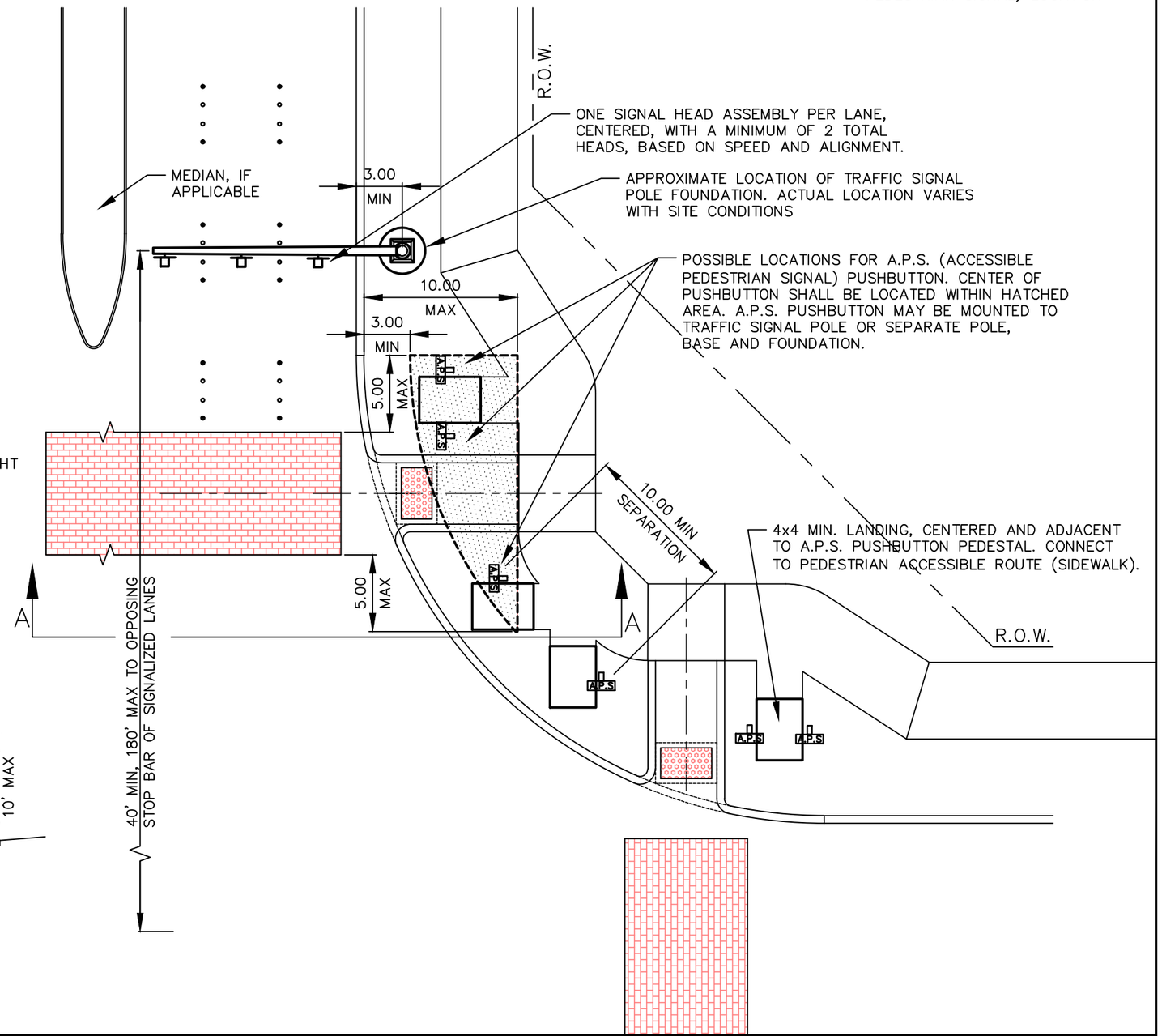

North Central Texas Council of Governments

NOTE: STANDARDS ARE ADOPTED FROM THE NCTOG STANDARD DRAWINGS DATED NOV. '96, WITH LOCAL EXCEPTIONS.

NO.	LOCAL EXCEPTION	BY	DATE
1	NEW DETAIL.	SWL	JUL. '14

THE CITY OF COPPELL TEXAS 1891

STANDARD CONSTRUCTION DETAILS
TRAFFIC SIGNAL
COLLECTOR STREETS AND THOROUGHFARES
CITY OF COPPELL DALLAS COUNTY, TEXAS

STD. SPEC. REFERENCE 305.
STANDARD DETAIL 1 2340

PATH: S:\Standard_Details\New_Dets_modified\SDCoppell2005.dwg

PAVEMENT SYSTEMS
TESTING REQUIREMENTS

1. ALL TESTING ASSOCIATED WITH PUBLIC PAVING IMPROVEMENTS SHALL BE CONDUCTED BY A CERTIFIED LABORATORY SELECTED BY THE CITY OF COPPELL ENGINEERING DEPT. THE CITY OF COPPELL SHALL PAY FOR INITIAL TESTS PERFORMED. THE CONTRACTOR SHALL PAY ALL COSTS ASSOCIATED WITH ANY RE-TESTING.

2. ALL TESTING ASSOCIATED WITH PRIVATE PAVING IMPROVEMENTS SHALL BE CONDUCTED BY A CERTIFIED LABORATORY SELECTED BY THE CONTRACTOR AND APPROVED CITY OF COPPELL ENGINEERING DEPT. THE CONTRACTOR SHALL PAY FOR ALL TESTS PERFORMED UNLESS OTHERWISE NOTED ON THE PLANS AND SPECIFICATIONS.

3. EMBANKMENT MATERIALS SHALL BE TESTED AND CERTIFIED FOR DENSITY, MOISTURE, GRADATIONS AND SUITABILITY AS SET FORTH IN THE NCTCOG SPECIFICATIONS, FOLLOWING STANDARD TEST PROCEDURES.

4. DENSITY TESTING SHALL BE PERFORMED ON EACH LIFT OF PROPERLY PLACED AND COMPACTED MATERIAL, AND MINIMUM REQUIREMENTS FOR DENSITY SHALL BE NINETY-FIVE (95) PERCENT (%) OF THE MAXIMUM DENSITY AS DETERMINED BY ASTM D698.

5. MOISTURE CONTENT OF THE MATERIAL SHALL BE FROM OPTIMUM MOISTURE CONTENT TO PLUS FOUR (4) PERCENT (%) ABOVE OPTIMUM MOISTURE CONTENT.

6. THE MINIMUM FREQUENCY OF DENSITY TESTING SHALL BE THREE (3) TESTS PER ONE (1) FOOT LOOSE LIFT PER TWO THOUSAND (2000) SQUARE YARDS OF SURFACE AREA.

7. RETESTING OF MATERIALS SHALL BE PERFORMED AT THE ORIGINAL TEST LOCATION.

8. GRADATIONS AFTER THE FINAL MIXING SHALL BE AS FOLLOWS:
   MINIMUM PASSING 1 INCH LABORATORY SIEVE: 100%
   MINIMUM PASSING NO. 4 LABORATORY SIEVE: 60%
   TESTS SHALL BE TAKEN EVERY ONE THOUSAND (1,000) SQUARE YARDS.

9. UPON COMPLETION OF THE WORK AND BEFORE FINAL ACCEPTANCE/FINAL PAYMENT SHALL BE MADE, PAVEMENT THICKNESS TESTS MAY BE CONDUCTED AT THE DISCRETION OF THE CONSTRUCTION INSPECTOR. IF REQUIRED, THE NUMBER OF CORES FOR THICKNESS VERIFICATION SHALL BE BASED ON THREE (3) CORES FOR EVERY TWO THOUSAND (2000) SQUARE YARDS OF PAVEMENT SURFACE AREA, OR ANY PART THEREOF.

1. 10. DURING THE PROGRESS OF THE WORK, THE TESTING LABORATORY SHALL CAST TEST CYLINDERS TO MAINTAIN A CHECK ON THE COMPRESSIVE STRENGTH OF THE CONCRETE BEING PLACED. SAMPLING AND MOLDING OF TEST SPECIMENS SHALL MEET THE APPLICABLE ASTM GUIDELINES. CONCRETE PAVEMENT TESTING SHALL REQUIRE THREE (3) INDIVIDUAL STRENGTH SAMPLES PER TEST, AT A FREQUENCY OF ONE TEST PER ONE HUNDRED (100) CUBIC YARDS, OR FRACTION THEREOF, OF CONCRETE PLACED PER DAY. A COPY OF THE TEST RESULTS SHALL BE DELIVERED TO THE ENGINEERING DEPARTMENT AND SHALL INCLUDE THE DATE AND TIME OF SAMPLING, EXACT LOCATION CONCRETE WAS PLACED, TRUCK TICKET NUMBER, SLUMP, AIR CONTENT, AND TEMPERATURE OF CONCRETE.

11. ANY DEFICIENCIES IN CONCRETE THICKNESS OR STRENGTH SHALL BE HANDLED IN ACCORDANCE WITH NCTCOG ITEM 303.8.

North Central Texas Council of Governments

NOTE: STANDARDS ARE ADOPTED FROM THE NCTOG STANDARD DRAWINGS DATED NOV. '96, WITH LOCAL EXCEPTIONS.

NO.	LOCAL EXCEPTION	BY	DATE
1	CHANGE RESPONSIBILITY FOR CASTING CYLINDERS FROM CONTRACTOR TO TESTING LABORATORY.	SWL	JUL. '14

THE CITY OF COPPELL TEXAS 1890

STANDARD CONSTRUCTION DETAILS

PAVEMENT SYSTEMS
TESTING REQUIREMENTS

CITY OF COPPELL DALLAS COUNTY, TEXAS

STD. SPEC. REFERENCE

STANDARD DETAIL
2350

PATH: S:\Standard_Details\New_Dets_modified\SDCoppell2005.dwg